Frequency Inverter

CFW500 V2.2X

Programming Manual

Programming Manual

Series: CFW500

Language: English

Document Number: 10002296099 / 04

Software Version: 2.2X

Publication Date: 09/2020

Summary of Reviews

The information below describes the reviews made in this manual.

Version	Review	Description
V1.5X	R00	First edition
V1.8X	R01	General Revision Inclusion of the Profibus DP Interface Adjustment of Figure 7.2 on page 7-3 New CPDP optional item New parameters P0740...P0755 and P0918, P0922, P0963, P0967 and P0968 Change of P0343 Inclusion of parameters: P0308, P0310, P0311, P0510,P0511, P0512, P0513, P1000 New options in the adjustable range of P0027 New Fault F0076 Inclusion of the Ethernet Interface
V2.0X	R02	General Revision New options in the adjustable range of parameters: P0027, P0204, P0312, P0343 Inclusion of parameter P0800 New CFW500 - ENC Optional Item New Ethernet Interface Inclusion of the Vector Control
V2.2X	R03	General Revision New adjustable ranges for parameter P0047 New parameters included: P0431, P0435, P0445, P0446, P0448, P0451, P0452, P0453, P0454 Inclusion of VVW PM control for PM Moto
V2.2X	R04	General Revision New adjustable ranges for parameter P1001

QUICK REFERENCE OF PARAMETERS, ALARMS, FAULTS AND CONFIGURATIONS 0-1

1 SAFETY INSTRUCTIONS 1-1
1.1 SAFETY WARNINGS IN THIS MANUAL 1-1
1.2 SAFETY WARNINGS IN THE PRODUCT 1-1
1.3 PRELIMINARY RECOMMENDATIONS 1-2

2 GENERAL INFORMATION 2-1
2.1 ABOUT THE MANUAL 2-1
2.2 TERMINOLOGY AND DEFINITIONS 2-1
2.2.1 Terms and Definitions Used 2-1
2.2.2 Numerical Representation 2-3
2.2.3 Symbols to Describe Parameter Properties 2-3

3 ABOUT THE CFW500 3-1

4 HMI AND BASIC PROGRAMMING 4-1
4.1 USE OF THE HMI TO OPERATE THE INVERTER 4-1
4.2 INDICATIONS ON THE HMI DISPLAY 4-1
4.3 OPERATING MODES OF THE HMI 4-2

5 PROGRAMMING BASIC INSTRUCTIONS 5-1
5.1 PARAMETER STRUCTURE 5-1
5.2 PARAMETERS SELECTED BY THE HMI MENU 5-1
5.3 HMI 5-2
5.4 BACKUP PARAMETERS 5-5
5.5 SETTING OF DISPLAY INDICATIONS IN THE MONITORING MODE 5-6
5.6 SITUATIONS FOR CONFIG STATUS 5-7
5.7 SOFTPLC ENGINEERING UNITS 5-7

6 IDENTIFICATION OF THE INVERTER MODEL AND ACCESSORIES 6-1
6.1 INVERTER DATA 6-1

7 LOGICAL COMMAND AND SPEED REFERENCE 7-1
7.1 SELECTION FOR LOGICAL COMMAND AND SPEED REFERENCE 7-1
7.2 SPEED REFERENCE 7-7
7.2.1 Speed Reference Limits 7-8
7.2.2 Speed Reference Backup 7-9
7.2.3 Speed Reference Parameters 7-10
7.2.4 Reference via Electronic Potentiometer 7-12
7.2.5 Analog Input AIx and Frequency Input FI 7-13
7.2.6 13-Bit Speed Reference 7-13
7.3 CONTROL WORD AND INVERTER STATUS 7-13
7.3.1 Control via HMI Inputs 7-17
7.3.2 Control via Digital Inputs 7-17

8 AVAILABLE MOTOR CONTROL TYPES 8-1

9 V/f SCALAR CONTROL 9-1
9.1 PARAMETERIZATION OF THE V/f SCALAR CONTROL 9-3
9.2 START-UP IN V/f MODE 9-7
9.3 DC LINK VOLTAGE AND OUTPUT CURRENT LIMITATION 9-8
9.3.1 DC Link Voltage Limitation by "Ramp Hold" P0150 = 0 or 2 9-8
9.3.2 DC Link Voltage Limitation by "Accelerate Ramp" P0150 = 1 or 3 9-8
9.3.3 Output Current Limitation by "Ramp Hold" P0150 = 2 or 3 9-11
9.3.4 Current Limitation Type "Decelerate Ramp" P0150 = 0 or 1 9-11
9.4 ENERGY SAVING 9-12

10 VVW CONTROL 10-1
10.1 VVW CONTROL PARAMETERIZATION 10-3
10.2 START-UP IN VVW MODE 10-6

11 VVW PM CONTROL 11-1
11.1 PARAMETER SETTING OF THE VVW PM CONTROL 11-3
11.2 START-UP 11-4
11.3 PARAMETERS FOR SETTING THE VVW PM CONTROL 11-6

12 VECTOR CONTROL 12-1
12.1 SENSORLESS CONTROL AND WITH ENCODER 12-1
12.2 I/f MODE (SENSORLESS) 12-5
12.3 SELF-TUNING 12-5
12.4 TORQUE CONTROL 12-6
12.5 OPTIMAL BRAKING 12-8
12.6 MOTOR DATA 12-9
12.6.1 Adjustment of the Parameters P0409 to P0412 Based on the Motor Data Sheet ... 12-13
12.7 VECTOR CONTROL 12-14
12.7.1 Speed Regulator 12-14
12.7.2 Current Regulator 12-16
12.7.3 Flux Regulator 12-17
12.7.4 I/f Control 12-19
12.7.5 Self-Tuning 12-20
12.7.6 Torque Current Limitation 12-24
12.7.7 Supervision of Motor Real Speed 12-25
12.7.8 DC Link Regulator 12-25
12.8 START-UP IN THE VECTOR MODES SENSORLESS AND WITH ENCODER 12-27

13 FUNCTIONS COMMON TO ALL THE CONTROL MODES 13-1
13.1 RAMPS 13-1
13.2 SLEEP MODE 13-3
13.3 FLYING START / RIDE-THROUGH or VVW 13-4
13.3.1 Flying Start Function 13-5
13.3.2 Ride-Through Function 13-5
13.4 FLYING START / RIDE THROUGH TO THE VECTOR CONTROL 13-6
13.4.1 Vector Flying Start 13-6
13.4.1.1 P0202 = 3 13-6
13.4.2 P0202 = 4 13-8
13.4.3 Vector Ride-Through 13-9
13.5 DC BRAKING 13-11
13.6 AVOIDED FREQUENCY 13-13

14 DIGITAL AND ANALOG INPUTS AND OUTPUTS 14-1
14.1 ANALOG INPUTS.....14-1
14.2 ANALOG OUTPUTS 14-6
14.3 FREQUENCY INPUT 14-8
14.4 FREQUENCY OUTPUT 14-11
14.5 DIGITAL INPUTS 14-14
14.6 DIGITAL OUTPUTS..... 14-23

15 PID CONTROLLER 15-1
15.1 DESCRIPTIONS AND DEFINITIONS 15-1
15.2 START-UP 15-3
15.3 SLEEP MODE WITH PID 15-6
15.4 MONITORING MODE SCREEN 15-6
15.5 PID PARAMETER 15-7
15.6 ACADEMIC PID 15-12

16 RHEOSTATIC BRAKING 16-1

17 FAULTS AND ALARMS 17-1
17.1 MOTOR OVERLOAD PROTECTION (F0072 AND A0046) 17-1
17.2 IGBTS OVERLOAD PROTECTION (F0048 AND A0047) 17-3
17.3 MOTOR OVERTEMPERATURE PROTECTION (F0078).....17-4
17.4 IGBTS OVERTEMPERATURE PROTECTION (F0051 AND A0050).....17-5
17.5 OVERCURRENT PROTECTION (F0070 AND F0074) 17-6
17.6 LINK VOLTAGE SUPERVISION (F0021 AND F0022).....17-6
17.7 PLUG-IN MODULE COMMUNICATION FAULT (F0031) 17-6
17.8 CONTROL MODE SELF-TUNING FAULT (F0033) 17-7
17.9 REMOTE HMI COMMUNICATION FAULT ALARM (A0750) 17-7
17.10 REMOTE HMI COMMUNICATION ERROR FAULT (F0751)..... 17-7
17.11 AUTO-DIAGNOSIS FAULT (F0084) 17-7
17.12 FAULT IN THE CPU (F0080) 17-7
17.13 INCOMPATIBLE MAIN SOFTWARE VERSION (F0151) 17-7
17.14 PULSE FEEDBACK FAULT (F0182)..... 17-7
17.15 FAULT HISTORY.....17-8
17.16 FAULT AUTO-RESET 17-10

18 READING PARAMETERS 18-1

19 COMMUNICATION..... 19-1
19.1 SERIAL USB, RS-232 AND RS-485 INTERFACE.....19-1
19.2 CAN – CANOPEN / DEVICENET INTERFACE 19-3
19.3 PROFIBUS DP INTERFACE..... 19-4
19.4 ETHERNET INTERFACE 19-5
19.5 COMMANDS AND COMMUNICATION STATUS.....19-7

20 SOFTPLC 20-1

QUICK REFERENCE OF PARAMETERS, ALARMS, FAULTS AND CONFIGURATIONS

Parameter	Description	Adjustable Range	Factory Setting	User Setting	Properties	Groups	Page
P0000	Access to Parameters	0 to 9999	0				5-2
P0001	Speed Reference	0 to 65535			ro	READ	18-1
P0002	Output Speed (Motor)	0 to 65535			ro	READ	18-1
P0003	Motor Current	0.0 to 200.0 A			ro	READ	18-1
P0004	DC Link Voltage (Ud)	0 to 2000 V			ro	READ	18-1
P0005	Output Frequency (Motor)	0.0 to 500.0 Hz			ro	READ	18-2
P0006	Inverter Status	0 = Ready 1 = Run 2 = Undervoltage 3 = Fault 4 = Self-Tuning 5 = Configuration 6 = DC-Braking 7 = Sleep Mode			ro	READ	18-2
P0007	Output Voltage	0 to 2000 V			ro	READ	18-3
P0009	Motor Torque	-1000.0 to 1000.0 %			ro	READ	18-3
P0010	Output Power	0.0 to 6553.5 kW			ro	READ	18-4
P0011	Power Factor	-1.00 to 1.00			ro	READ	18-4
P0012	DI8 to DI1 Status	Bit 0 = DI1 Bit 1 = DI2 Bit 2 = DI3 Bit 3 = DI4 Bit 4 = DI5 Bit 5 = DI6 Bit 6 = DI7 Bit 7 = DI8			ro	READ, I/O	14-14
P0013	DO5 to DO1 Status	Bit 0 = DO1 Bit 1 = DO2 Bit 2 = DO3 Bit 3 = DO4 Bit 4 = DO5			ro	READ, I/O	14-23
P0014	AO1 Value	0.0 to 100.0 %			ro	READ, I/O	14-6
P0015	AO2 Value	0.0 to 100.0 %			ro	READ, I/O	14-6
P0016	FO Value in %	0.0 to 100.0 %			ro	READ, I/O	14-12
P0017	FO Value in Hz	0 to 20000 Hz			ro	READ, I/O	14-12
P0018	AI1 Value	-100.0 to 100.0 %			ro	READ, I/O	14-1
P0019	AI2 Value	-100.0 to 100.0 %			ro	READ, I/O	14-1
P0020	AI3 Value	-100.0 to 100.0 %			ro	READ, I/O	14-1
P0021	FI Value in %	-100.0 to 100.0 %			ro	READ, I/O	14-9
P0022	FI Value in Hz	0 to 20000 Hz			ro	READ, I/O	14-10
P0023	Main SW Version	0.00 to 655.35			ro	READ	6-1
P0024	Secondary SW Version	0.00 to 655.35			ro	READ	6-1
P0027	Plug-in Module Configuration	0 = Without Plug-in 1 = CFW500-IOS 2 = CFW500-IOD 3 = CFW500-IOAD 4 = CFW500-IOR 5 = CFW500-CUSB 6 = CFW500-CCAN 7 = CFW500-CRS232 8 = CFW500-CPDP 9 = CFW500-CRS485 10 = CFW500-ENC 11 = CFW500-CETH CFW500-CEMB-TCP CFW500-CEPN-IO 12 = CFW500-ENC2 13 = CFW500-ENC			ro	READ	6-1

Parameter	Description	Adjustable Range	Factory Setting	User Setting	Properties	Groups	Page
P0029	Power HW Configuration	0 = Non-identified 1 = 200-240 V / 1.6 A 2 = 200-240 V / 2.6 A 3 = 200-240 V / 4.3 A 4 = 200-240 V / 7.0 A 5 = 200-240 V / 9.6 A 6 = 380-480 V / 1.0 A 7 = 380-480 V / 1.6 A 8 = 380-480 V / 2.6 A 9 = 380-480 V / 4.3 A 10 = 380-480 V / 6.1 A 11 = 200-240 V / 7.3 A 12 = 200-240 V / 10.0 A 13 = 200-240 V / 16.0 A 14 = 380-480 V / 2.6 A 15 = 380-480 V / 4.3 A 16 = 380-480 V / 6.5 A 17 = 380-480 V / 10.0 A 18 = 200-240 V / 24.0 A 19 = 380-480 V / 14.0 A 20 = 380-480 V / 16.0 A 21 = 500-600 V / 1.7 A 22 = 500-600 V / 3.0 A 23 = 500-600 V / 4.3 A 24 = 500-600 V / 7.0 A 25 = 500-600 V / 10.0 A 26 = 500-600 V / 12.0 A 27 = 200-240 V / 28.0 A 28 = 200-240 V / 33.0 A 29 = 380-480 V / 24.0 A 30 = 380-480 V / 30.0 A 31 = 500-600 V / 17.0 A 32 = 500-600 V / 22.0 A 33 = 200-240 V / 45.0 A 34 = 200-240 V / 54.0 A 35 = 380-480 V / 38.0 A 36 = 380-480 V / 45.0 A 37 = 500-600 V / 27.0 A 38 = 500-600 V / 32.0 A 39 = 200-240 V / 70.0 A 40 = 200-240 V / 86.0 A 41 = 200-240 V / 105.0 A 42 = 380-480 V / 61.0 A 43 = 380-480 V / 75.0 A 44 = 200-240 V / 6.0 A	According to the inverter model		ro	READ	6-2
P0030	Module Temperature	-20 to 150 °C			ro	READ	18-5
P0037	Motor Overload Ixt	0 to 100 %			ro	READ	17-2
P0038	Encoder Speed	0 to 65535 rpm			ro	READ	17-3
P0039	Encoder Pulse Counter	0 to 40000			ro	READ	17-3
P0040	PID Process Variable	0.0 to 3000.0			ro	READ	15-7
P0041	PID Setpoint Value	0.0 to 3000.0			ro	READ	15-7
P0047	CONFIG Status	0 to 999			ro	READ	18-6
P0048	Present Alarm	0 to 999			ro	READ	17-8
P0049	Present Fault	0 to 999			ro	READ	17-8
P0050	Last Fault	0 to 999			ro	READ	17-8
P0051	Last Fault Current	0.0 to 200.0 A			ro	READ	17-8
P0052	Last Fault DC Link	0 to 2000 V			ro	READ	17-9
P0053	Last Fault Frequency	0.0 to 500.0 Hz			ro	READ	17-9
P0054	Last Fault Temperature	-20 to 150 °C			ro	READ	17-9
P0055	Last Fault Logical Status	0000h to FFFFh			ro	READ	17-10
P0060	Second Fault	0 to 999			ro	READ	17-8
P0061	Second Fault Current	0.0 to 200.0 A			ro	READ	17-8
P0062	Second Fault DC Link	0 to 2000 V			ro	READ	17-9
P0063	Second Fault Frequency	0.0 to 500.0 Hz			ro	READ	17-9
P0064	Second Fault Temperature	-20 to 150 °C			ro	READ	17-9

Parameter	Description	Adjustable Range	Factory Setting	User Setting	Properties	Groups	Page
P0065	Second Fault Logical Status	0000h to FFFFh			ro	READ	17-10
P0070	Third Fault	0 to 999			ro	READ	17-8
P0071	Third Fault Current	0.0 to 200.0 A			ro	READ	17-8
P0072	Third Fault DC Link	0 to 2000 V			ro	READ	17-9
P0073	Third Fault Frequency	0.0 to 500.0 Hz			ro	READ	17-9
P0074	Third Fault Temperature	-20 to 150 °C			ro	READ	17-9
P0075	Third Fault Logical Status	0000h to FFFFh			ro	READ	17-10
P0100	Acceleration Time	0.1 to 999.0 s	10.0 s			BASIC	13-1
P0101	Deceleration Time	0.1 to 999.0 s	10.0 s			BASIC	13-1
P0102	Acceleration Time 2	0.1 to 999.0 s	10.0 s				13-2
P0103	Deceleration Time 2	0.1 to 999.0 s	10.0 s				13-2
P0104	S Ramp	0 = Inactive 1 = Active	0		cfg		13-2
P0105	1st / 2nd Ramp Selection	0 = 1st Ramp 1 = 2nd Ramp 2 = DIx 3 = Serial/USB 4 = Reserved 5 = CO/DN/PB/Eth 6 = SoftPLC	2			I/O	13-3
P0106	3rd Ramp Time	0.1 to 999.0 s	5.0 s				13-3
P0120	Speed Ref. Backup	0 = Inactive 1 = Active 2 = Backup by P0121	1				7-9
P0121	Reference via HMI	0.0 to 500.0 Hz	3.0 Hz				7-10
P0122	JOG Reference	-500.0 to 500.0 Hz	5.0 Hz				7-10
P0124	Multispeed Ref. 1	-500.0 to 500.0 Hz	3.0 Hz				7-10
P0125	Multispeed Ref. 2	-500.0 to 500.0 Hz	10.0 (5.0) Hz				7-10
P0126	Multispeed Ref. 3	-500.0 to 500.0 Hz	20.0 (10.0) Hz				7-10
P0127	Multispeed Ref. 4	-500.0 to 500.0 Hz	30.0 (20.0) Hz				7-11
P0128	Multispeed Ref. 5	-500.0 to 500.0 Hz	40.0 (30.0) Hz				7-11
P0129	Multispeed Ref. 6	-500.0 to 500.0 Hz	50.0 (40.0) Hz				7-11
P0130	Multispeed Ref. 7	-500.0 to 500.0 Hz	60.0 (50.0) Hz				7-11
P0131	Multispeed Ref. 8	-500.0 to 500.0 Hz	66.0 (55.0) Hz				7-11
P0132	Maximum Overspeed Level	0 to 100 %	10 %		cfg	BASIC	7-8
P0133	Minimum Speed	0.0 to 500.0 Hz	3.0 Hz			BASIC	7-9
P0134	Maximum Speed	0.0 to 500.0 Hz	66.0 (55.0) Hz			BASIC	7-9
P0135	Maximum Output Current	0.0 to 200.0 A	$1.5xI_{nom}$		V/f, VVW, VVW PM	BASIC, MOTOR	9-11
P0136	Manual Torque Boost	0.0 to 30.0 %	According to inverter model		V/f, VVW PM	BASIC, MOTOR	9-4
P0137	Automatic Torque Boost	0.0 to 30.0 %	0.0 %		V/f	MOTOR	9-5
P0138	Slip Compensation	-10.0 to 10.0 %	0.0 %		V/f	MOTOR	9-6
P0139	Output Current Filter	0 to 9999 ms	50 ms		V/f, VVW		8-2
P0140	Slip Com. Filter	0 to 9999 ms	500 ms		VVW		8-2
P0142	Maximum Output Voltage	0.0 to 100.0 %	100.0 %		cfg, V/f, VVW PM		9-4
P0143	Intermediate Output Voltage	0.0 to 100.0 %	66.7 %		cfg, V/f, VVW PM		9-4
P0144	Minimum Output Voltage	0.0 to 100.0 %	33.3 %		cfg, V/f, VVW PM		9-4
P0145	Field Weakening Start Frequency	0.0 to 500.0 Hz	60.0 (50.0) Hz		cfg, V/f, VVW PM		9-5
P0146	Intermediate Frequency	0.0 to 500.0 Hz	40.0 (33.3) Hz		cfg, V/f, VVW PM		9-5
P0147	Low Frequency	0.0 to 500.0 Hz	20.0 (16.7) Hz		cfg, V/f, VVW PM		9-5

Parameter	Description	Adjustable Range	Factory Setting	User Setting	Properties	Groups	Page
P0150	Type DC V/f Link Regulator	0 = hold_Ud and decel_LC 1 = accel_Ud and decel_LC 2 = hold_Ud and hold_LC 3 = accel_Ud and hold_LC	0		cfg, V/f, VVW	MOTOR	9-9
P0151	DC Link Regul. Level	339 to 1200 V	400 V (P0296 = 0) 800 V (P0296 = 1) 800 V (P0296 = 2) 800 V (P0296 = 3) 800 V (P0296 = 4) 800 V (P0296 = 5) 1000 V (P0296 = 6) 1000 V (P0296 = 7)		V/f, VVW, VVW PM		9-9
P0152	DC Link Regul. Prop. Gain	0.00 to 9.99	1.50		V/f, VVW, VVW PM		9-9
P0153	Rheostatic Braking Level	339 to 1200 V	375 V (P0296 = 0) 748 V (P0296 = 1) 748 V (P0296 = 2) 748 V (P0296 = 3) 748 V (P0296 = 4) 748 V (P0296 = 5) 950 V (P0296 = 6) 950 V (P0296 = 7)				16-1
P0156	Overload Current 100 %	0.0 to 200.0 A	$1.1xI_{nom}$				17-1
P0157	Overload Current 50 %	0.0 to 200.0 A	$1.0xI_{nom}$				17-1
P0158	Overload Current 5 %	0.0 to 200.0 A	$0.8xI_{nom}$				17-1
P0161	Speed Proportional Gain	0.0 to 63.9	7.0		Vector		12-14
P0162	Speed Integral Gain	0.000 to 9.999	0.005		Vector		12-15
P0165	Speed Filter	0.012 to 1.000 s	0.012 s		Vector		12-16
P0166	Speed Differential Gain	0.00 to 7.99	0.00		Vector		12-16
P0167	Current Proportional Gain	0.00 to 1.99	0.50		Vector		12-16
P0168	Current Integral Gain	0.000 to 1.999	0.010		Vector		12-17
P0169	Maximum + Torque Current	0.0 to 350.0 %	125.0 %		Vector	BASIC	12-24
P0170	Maximum - Torque Current	0.0 to 350.0 %	125.0 %		Vector	BASIC	12-24
P0175	Flux Proportional Gain	0.0 to 31.9	2.0		Vector		12-17
P0176	Flux Integral Gain	0.000 to 9.999	0.020		Vector		12-17
P0178	Rated Flux	0.0 to 150.0 %	100.0 %				12-18
P0181	Magnetization Mode	0 = General Enable 1 = Start / Stop	0		cfg, Enc		12-18
P0182	Speed for I/f Activation	0 to 180 rpm	30 rpm		Sless	MOTOR	12-19
P0183	Current in I/f Mode	15.0 to 300.0 %	120.0 %		Sless	MOTOR	12-20
P0184	DC Link Regulation Mode	0 = With Losses 1 = Without Losses 2 = Enable/Disable DIx	1		cfg, Vector	MOTOR	12-26
P0185	DC Link Regulation Level	339 to 1000 V	400 V (P0296= 0) 800 V (P0296= 1) 800 V (P0296 = 2) 800 V (P0296 = 3) 800 V (P0296 = 4) 800 V (P0296 = 5) 1000 V (P0296 = 6) 1000 V (P0296 = 7)		Vector		12-26
P0186	DC Link Proportional Gain	0.0 to 63.9	18.0		Vector		12-27
P0187	DC Link Integral Gain	0.000 to 9.999	0.002		Vector		12-27
P0188	Voltage Proport. Gain	0.000 to 7.999	0.200		Vector		12-18
P0189	Voltage Integral Gain	0.000 to 7.999	0.001		Vector		12-18
P0190	Maximum Output Voltage	0 to 600 V	220 V (P0296 = 0) 380 V (P0296 = 1) 436 V (P0296 = 2) 423 V (P0296 = 3) 462 V (P0296 = 4) 436 V (P0296 = 5) 575 V (P0296 = 6) 660 V (P0296 = 7)		Vector		12-19

Parameter	Description	Adjustable Range	Factory Setting	User Setting	Properties	Groups	Page
P0200	Password	0 = Inactive 1 = Active 1 to 9999 = New Password	0			HMI	5-2
P0202	Type of Control	0 = V/f 1 and 2 = Not Used 3 = Sensorless 4 = Encoder 5 = VVW 6 and 7 = Not Used 8 = VVW PM	0		cfg	STARTUP	8-1
P0203	Special Function Sel.	0 = None 1 = PID via AI1 2 = PID via AI3 3 = PID via FI	0		cfg		15-7
P0204	Load/Save Parameters	0 to 4 = Not Used 5 = Load WEG 60 Hz 6 = Load WEG 50 Hz 7 = Load User 1 8 = Load User 2 9 = Save User 1 10 = Save User 2 11 = Load Default SoftPLC 12 to 15 = Reserved	0		cfg		5-5
P0205	Main Display Parameter	0 to 1500	2			HMI	5-3
P0206	Secondary Display Parameter	0 to 1500	1			HMI	5-3
P0207	Parameter for Bar	0 to 1500	3			HMI	5-3
P0208	Scale of Reference	1 to 65535	600 (500)			HMI	5-3
P0209	Ref. Eng. Unit	0 = Without Unit 1 = V 2 = A 3 = rpm 4 = s 5 = ms 6 = N 7 = m 8 = Nm 9 = mA 10 = % 11 = °C 12 = CV 13 = Hz 14 = HP 15 = h 16 = W 17 = kW 18 = kWh 19 = H	13			HMI	5-4
P0210	Ref. Indication Form	0 = wxyz 1 = wxy.z 2 = wx.yz 3 = w.xyz	1			HMI	5-4
P0213	Bar Scale Factor	1 to 65535	According to the inverter model			HMI	5-4
P0216	HMI Backlight	0 = OFF 1 = ON	1		cfg	HMI	5-5
P0217	Sleep Mode Frequency	0.0 to 500.0 Hz	0.0 Hz		cfg		13-4
P0218	Sleep Mode Time	0 to 999 s	0 s				13-4
P0220	LOC/REM Selection Source	0 = Always Local 1 = Always Remote 2 = HMI Key (LOC) 3 = HMI Key (REM) 4 = DIx 5 = Serial/USB (LOC) 6 = Serial/USB (REM) 7 = Not Used 8 = Not Used 9 = CO/DN/PB/Eth (LOC) 10 = CO/DN/PB/Eth (REM) 11 = SoftPLC	2		cfg	I/O	7-5

Parameter	Description	Adjustable Range	Factory Setting	User Setting	Properties	Groups	Page
P0221	LOC Reference Sel.	0 = HMI Keys 1 = AI1 2 = AI2 3 = AI3 4 = FI 5 = AI1 + AI2 > 0 6 = AI1 + AI2 7 = E.P. 8 = Multispeed 9 = Serial/USB 10 = Not Used 11 = CO/DN/PB/Eth 12 = SoftPLC 13 = Not Used 14 = AI1 > 0 15 = AI2 > 0 16 = AI3 > 0 17 = FI > 0	0		cfg	I/O	7-5
P0222	REM Reference Sel.	See options in P0221	1		cfg	I/O	7-5
P0223	LOC Rotation Sel.	0 = Clockwise 1 = Counterclockwise 2 = HMI Key (H) 3 = HMI Keys (AH) 4 = DIx 5 = Serial/USB (H) 6 = Serial/USB (AH) 7 and 8 = Not Used 9 = CO/DN/PB/Eth (H) 10 = CO/DN/PB/Eth (AH) 11 = Not Used 12 = SoftPLC	2		cfg	I/O	7-6
P0224	LOC Run/Stop Sel.	0 = HMI Keys 1 = DIx 2 = Serial/USB 3 = Not Used 4 = CO/DN/PB/Eth 5 = SoftPLC	0		cfg	I/O	7-7
P0225	LOC JOG Selection	0 = Disable 1 = HMI Keys 2 = DIx 3 = Serial/USB 4 = Not Used 5 = CO/DN/PB/Eth 6 = SoftPLC	1		cfg	I/O	7-7
P0226	REM Rotation Selection	See options in P0223	4		cfg	I/O	7-6
P0227	REM Run/Stop Selection	0 = Tecla HMI 1 = DIx 2 = Serial/USB 3 = Not Used 4 = CO/DN/PB/Eth 5 = SoftPLC	1		cfg	I/O	7-7
P0228	REM JOG Selection	See options in P0225	2		cfg	I/O	7-7
P0229	Stop Mode Selection	0 = Ramp to Stop 1 = Coast to Stop 2 = Quick Stop	0		cfg	I/O	7-16
P0230	Dead Zone (AIs)	0 = Inactive 1 = Active	0		cfg	I/O	14-2
P0231	AI1 Signal Function	0 = Speed Ref. 1 = Not Used 2 = Maximum Torque Current 3 = Not Used 4 = PTC 5 and 6 = Not Used 7 = Use SoftPLC 8 = Function 1 Application 9 = Function 2 Application 10 = Function 3 Application 11 = Function 4 Application 12 = Function 5 Application 13 = Function 6 Application 14 = Function 7 Application 15 = Function 8 Application	0		cfg	I/O	14-2
P0232	AI1 Input Gain	0.000 to 9.999	1.000			I/O	14-3

Parameter	Description	Adjustable Range	Factory Setting	User Setting	Properties	Groups	Page
P0233	AI1 Input Signal	0 = 0 to 10 V / 20 mA 1 = 4 to 20 mA 2 = 10 V / 20 mA to 0 3 = 20 to 4 mA	0			I/O	14-4
P0234	AI1 Input Offset	-100.0 to 100.0 %	0.0 %			I/O	14-3
P0235	AI1 Input Filter	0.00 to 16.00 s	0.00 s			I/O	14-4
P0236	AI2 Signal Function	See options in P0231	0		cfg	I/O	14-2
P0237	AI2 Input Gain	0.000 to 9.999	1.000			I/O	14-3
P0238	AI2 Input Signal	See options in P0233	0			I/O	14-4
P0239	AI2 Input Offset	-100.0 to 100.0 %	0.0 %			I/O	14-3
P0240	AI2 Input Filter	0.00 to 16.00 s	0.00 s			I/O	14-4
P0241	AI3 Signal Function	See options in P0231	0		cfg	I/O	14-3
P0242	AI3 Input Gain	0.000 to 9.999	1.000			I/O	14-3
P0243	AI3 Input Signal	0 = 0 to 10 V / 20 mA 1 = 4 to 20 mA 2 = 10 V / 20 mA to 0 3 = 20 to 4 mA 4 = -10 to +10 V	0			I/O	14-4
P0244	AI3 Input Offset	-100.0 to 100.0 %	0.0 %			I/O	14-3
P0245	AI3 Input Filter	0.00 to 16.00 s	0.00 s			I/O	14-4
P0246	FI Input in Freq.	0 = Inactive 1 = Active	0			I/O	14-10
P0247	FI Input Gain	0.000 to 9.999	1.000			I/O	14-10
P0248	FI Minimum Input	10 to 20000 Hz	10 Hz			I/O	14-10
P0249	FI Input Offset	-100.0 to 100.0 %	0.0 %			I/O	14-10
P0250	FI Maximum Input	10 to 20000 Hz	10000 Hz			I/O	14-10
P0251	AO1 Output Function	0 = Speed Ref. 1 = Not Used 2 = Real Speed 3 = Torque Current Reference 4 = Torque Current 5 = Output Current 6 = Process Var. 7 = Active Current 8 = Output Power 9 = PID Setpoint 10 = Torque Current > 0 11 = Motor Torque 12 = SoftPLC 13 to 15 = Not Used 16 = Motor Ixt 17 = Not Used 18 = P0696 Value 19 = P0697 Value 20 = P0698 Value 21 = Function 1 Application 22 = Function 2 Application 23 = Function 3 Application 24 = Function 4 Application 25 = Function 5 Application 26 = Function 6 Application 27 = Function 7 Application 28 = Function 8 Application	2			I/O	14-7
P0252	AO1 Output Gain	0.000 to 9.999	1.000			I/O	14-8
P0253	AO1 Output Signal	0 = 0 to 10 V 1 = 0 to 20 mA 2 = 4 to 20 mA 3 = 10 to 0 V 4 = 20 to 0 mA 5 = 20 to 4 mA	0			I/O	14-8
P0254	AO2 Output Function	See options in P0251	5			I/O	14-7
P0255	AO2 Output Gain	0.000 to 9.999	1.000			I/O	14-8
P0256	AO2 Output Signal	See options in P0253	0			I/O	14-8

Parameter	Description	Adjustable Range	Factory Setting	User Setting	Properties	Groups	Page
P0257	FO Output Function	0 = Speed Ref. 1 = Not Used 2 = Real Speed 3 to 4 = Not Used 5 = Output Current 6 = Process Var. 7 = Active Current 8 = Not Used 9 = PID Setpoint 10 = Not Used 11 = Motor Torque 12 = SoftPLC 13 and 14 = Not Used 15 = Disable FO 16 = Motor Ixt 17 = Not Used 18 = P0696 Value 19 = P0697 Value 20 = P0698 Value 21 = Function 1 Application 22 = Function 2 Application 23 = Function 3 Application 24 = Function 4 Application 25 = Function 5 Application 26 = Function 6 Application 27 = Function 7 Application 28 = Function 8 Application	15			I/O	14-12
P0258	FO Output Gain	0.000 to 9.999	1.000			I/O	14-13
P0259	FO Minimum Output	10 to 20000 Hz	10 Hz			I/O	14-13
P0260	FO Maximum Output	10 to 20000 Hz	10000 Hz			I/O	14-13
P0263	DI1 Input Function	0 = Not Used 1 = Run/Stop 2 = General Enable 3 = Quick Stop 4 = Forward Run 5 = Reverse Run 6 = Start 7 = Stop 8 = Clockwise Rotation Dir. 9 = LOC/REM 10 = JOG 11 = Accelerate E.P. 12 = Decelerate E.P. 13 = Multispeed 14 = 2nd Ramp 15 to 17 = Not Used 18 = No Ext. Alarm 19 = No Ext. Fault 20 = Reset 21 = SoftPLC 22 = PID Man./Auto 23 = Not Used 24 = Disab.Flying Start 25 = DC Link Regulator 26 = Lock Prog. 27 = Load User 1 28 = Load User 2 29 = PTC 30 and 31 = Not Used 32 = 2nd Ramp Multispeed 33 = 2nd Ramp E.P. Ac. 34 = 2nd Ramp E.P. De. 35 = 2nd Ramp FWD Run 36 = 2nd Ramp Rev Run 37 = Turn ON / Ac. E.P. 38 = De. E.P. / Turn OFF 39 = Function 1 Application 40 = Function 2 Application 41 = Function 3 Application 42 = Function 4 Application 43 = Function 5 Application 44 = Function 6 Application 45 = Function 7 Application 46 = Function 8 Application	1		cfg	I/O	14-15
P0264	DI2 Input Function	See options in P0263	8		cfg	I/O	14-15

Parameter	Description	Adjustable Range	Factory Setting	User Setting	Properties	Groups	Page
P0265	DI3 Input Function	See options in P0263	20		cfg	I/O	14-15
P0266	DI4 Input Function	See options in P0263	10		cfg	I/O	14-15
P0267	DI5 Input Function	See options in P0263	0		cfg	I/O	14-15
P0268	DI6 Input Function	See options in P0263	0		cfg	I/O	14-15
P0269	DI7 Input Function	See options in P0263	0		cfg	I/O	14-15
P0270	DI8 Input Function	See options in P0263	0		cfg	I/O	14-15
P0271	DIs Signal	0 = (DI1...DI8) NPN 1 = DI1 PNP 2 = (DI1...DI2) PNP 3 = (DI1...DI3) PNP 4 = (DI1...DI4) PNP 5 = (DI1...DI5) PNP 6 = (DI1...DI6) PNP 7 = (DI1...DI7) PNP 8 = (DI1...DI8) PNP	0		cfg	I/O	14-14
P0275	DO1 Output Function	0 = Not Used 1 = F* > Fx 2 = F > Fx 3 = F < Fx 4 = F = F* 5 = Reserved 6 = Is > Ix 7 = Is < Ix 8 = Torque > Tx 9 = Torque < Tx 10 = Remote 11 = Run 12 = Ready 13 = No Fault 14 = No F0070 15 = Not Used 16 = No F0021/22 17 = Not Used 18 = No F0072 19 = 4-20 mA OK 20 = P0695 Value 21 = Clockwise Dir. 22 = Proc. V. > VPx 23 = Proc. V. < VPx 24 = Ride-Through 25 = Pre-Charge OK 26 = With Fault 27 = Not Used 28 = SoftPLC 29 to 34 = Not Used 35 = No Alarm 36 = No Fault/Alarm 37 = Function 1 Application 38 = Function 2 Application 39 = Function 3 Application 40 = Function 4 Application 41 = Function 5 Application 42 = Function 6 Application 43 = Function 7 Application 44 = Function 8 Application	13			I/O	14-24
P0276	DO2 Output Function	See options in P0275	2			I/O	14-24
P0277	DO3 Output Function	See options in P0275	0			I/O	14-24
P0278	DO4 Output Function	See options in P0275	0			I/O	14-24
P0279	DO5 Output Function	See options in P0275	0			I/O	14-24
P0287	Fx Hysteresis	0.0 to 10.0 Hz	0.5 Hz			I/O	14-25
P0288	Fx Speed	0.0 to 500.0 Hz	3.0 Hz			I/O	14-25
P0290	Ix Current	0.0 to 200.0 A	$1.0xI_{nom}$			I/O	14-25
P0293	Tx Torque	0 to 200 %	100 %			I/O	14-25
P0295	Inv. Rated Current	0.0 to 200.0 A	According to inverter model		ro	READ	6-3

Parameter	Description	Adjustable Range	Factory Setting	User Setting	Properties	Groups	Page
P0296	Line Rated Voltage	0 = 200 - 240 V 1 = 380 V 2 = 400 - 415 V 3 = 440 - 460 V 4 = 480 V 5 = 500 - 525 V 6 = 550 - 575 V 7 = 600 V	According to inverter model		ro, cfg	READ	6-4
P0297	Switching Frequency	2500 to 15000 Hz	5000 Hz		cfg		6-4
P0299	Start Braking Time	0.0 to 15.0 s	0.0 s		V/f, VVW, Sless		13-11
P0300	Stop Braking Time	0.0 to 15.0 s	0.0 s		V/f, VVW, Sless		13-12
P0301	Start Frequency	0.0 to 500.0 Hz	3.0 Hz		V/f, VVW, Sless		13-13
P0302	DC Braking Voltage	0.0 to 100.0 %	20.0 %		V/f, VVW		13-13
P0303	Skip Frequency 1	0.0 to 500.0 Hz	20.0 Hz				13-13
P0304	Skip Frequency 2	0.0 to 500.0 Hz	30.0 Hz				13-13
P0306	Skip Band	0.0 to 25.0 Hz	0.0 Hz				13-14
P0308	Serial Address	1 to 247	1			NET	19-2
P0310	Serial Baud Rate	0 = 9600 bits/s 1 = 19200 bits/s 2 = 38400 bits/s	1			NET	19-2
P0311	Serial Bytes Config.	0 = 8 bits, no, 1 1 = 8 bits, even, 1 2 = 8 bits, odd, 1 3 = 8 bits, no, 2 4 = 8 bits, even, 2 5 = 8 bits, odd, 2	1			NET	19-2
P0312	Serial Protocol (1) (2)	0 = HMI (1) 1 = Reserved 2 = Modbus RTU (1) 3 and 4 = Reserved 5 = Master RTU (1) 6 = HMI (1) + Modbus RTU (2) 7 = Modbus RTU (2) 8 to 11 = Reserved 12 = HMI (1)/RTU Master (2) 13 = RTU Master (2)	2		cfg	NET	19-3
P0313	Communic. Error Action	0 = Inactive 1 = Ramp Stop 2 = General Disable 3 = Go to LOC 4 = LOC Keep Enab 5 = Cause Fault	1			NET	19-3
P0314	Serial Watchdog	0.0 to 999.0 s	0.0 s			NET	19-3
P0316	Serial Interf. Status	0 = Inactive 1 = Active 2 = Watchdog Error			ro	NET	19-3
P0317	Oriented Start-up	0 = No 1 = Yes	0		cfg	STARTUP	5-6
P0320	Flying Start/Ride-Through	0 = Inactive 1 = Flying Start (FS) 2 = FS / RT 3 = Ride-Through (RT) 4 = FS for AI1 5 = FS for P0696	0		cfg		13-5
P0321	DC Link Power Loss	178 to 770 V	252 V (P0296 = 0) 436 V (P0296 = 1) 436 V (P0296 = 2) 436 V (P0296 = 3) 436 V (P0296 = 4) 535 V (P0296 = 5) 535 V (P0296 = 6) 535 V (P0296 = 7)		Vector		13-10

Parameter	Description	Adjustable Range	Factory Setting	User Setting	Properties	Groups	Page
P0322	DC Link Ride-Through	178 to 770 V	245 V (P0296 = 0) 423 V (P0296 = 1) 423 V (P0296 = 2) 423 V (P0296 = 3) 423 V (P0296 = 4) 423 V (P0296 = 5) 423 V (P0296 = 6) 423 V (P0296 = 7)		Vector		13-10
P0323	DC Link Power Back	178 to 770 V	267 V (P0296 = 0) 462 V (P0296 = 1) 462 V (P0296 = 2) 462 V (P0296 = 3) 462 V (P0296 = 4) 462 V (P0296 = 5) 462 V (P0296 = 6) 462 V (P0296 = 7)		Vector		13-10
P0325	Ride-Through P Gain	0.0 to 63.9	22.8		Vector		13-11
P0326	Ride-Through I Gain	0.000 to 9.999	0.128		Vector		13-11
P0327	FS I/f Current Ramp	0.000 to 1.000	0.070		Sless		13-7
P0328	Flying Start Filter	0.000 to 1.000	0.085		Sless		13-7
P0329	FS I/f Frequency Ramp	2.0 to 50.0	6.0		Sless		13-7
P0331	Voltage Ramp	0.2 to 60.0 s	2.0 s		V/f, VVW		13-5
P0340	Auto-Reset Time	0 to 255 s	0 s				17-10
P0343	Fault/Alarm Mask	Bit 0 = F0074 Bit 1 = F0048 Bit 2 = F0078 Bit 3 = F0079 Bit 4 = F0076 Bit 5 = F0179 Bit 6 = F0067 Bit 7 to 15 = Reserved	004Fh		cfg		17-4
P0349	Ixt Alarm Level	70 to 100 %	85 %		cfg		17-2
P0360	Speed Hysteresis	0.0 to 100.0 %	10.0 %		Vector		12-25
P0361	Time with Speed Different from Reference	0.0 to 999.0 s	0.0 s		Vector		12-25
P0397	Control Configuration	Bit 0 = Regen. Slip Comp. Bit 1 = Dead Time Comp. Bit 2 = Is Stabilization Bit 3 = Red. P0297 in A0050 Bit 4 = Reservad Bit 5 = Ud Compensation to VVW PM	Bit 4 to 5		cfg		8-2
P0398	Motor Service Factor	1.00 to 1.50	1.00		cfg	MOTOR, STARTUP	10-5
P0399	Motor Rated Efficiency	50.0 to 99.9 %	75.0 %		cfg, VVW	MOTOR, STARTUP	10-5
P0400	Motor Rated Voltage	200 to 600 V	220 V (P0296 = 0) 380 V (P0296 = 1) 380 V (P0296 = 2) 380 V (P0296 = 3) 380 V (P0296 = 4) 380 V (P0296 = 5) 575 V (P0296 = 6) 575 V (P0296 = 7)		cfg	MOTOR, STARTUP	12-10
P0401	Motor Rated Current	0.0 to 200.0 A	$1.0xI_{nom}$		cfg	MOTOR, STARTUP	12-10
P0402	Motor Rated Rotation	0 to 30000 rpm	1710 (1425) rpm		cfg	MOTOR, STARTUP	12-11
P0403	Motor Rated Frequency	0 to 500 Hz	60 (50) Hz		cfg	MOTOR, STARTUP	12-11

Parameter	Description	Adjustable Range	Factory Setting	User Setting	Properties	Groups	Page
P0404	Motor Rated Power	0 = 0.16 HP (0.12 kW) 1 = 0.25 HP (0.19 kW) 2 = 0.33 HP (0.25 kW) 3 = 0.50 HP (0.37 kW) 4 = 0.75 HP (0.55 kW) 5 = 1.00 HP (0.75 kW) 6 = 1.50 HP (1.10 kW) 7 = 2.00 HP (1.50 kW) 8 = 3.00 HP (2.20 kW) 9 = 4.00 HP (3.00 kW) 10 = 5.00 HP (3.70 kW) 11 = 5.50 HP (4.00 kW) 12 = 6.00 HP (4.50 kW) 13 = 7.50 HP (5.50 kW) 14 = 10.00 HP (7.50 kW) 15 = 12.50 HP (9.00 kW) 16 = 15.00 HP (11.00 kW) 17 = 20.00 HP (15.00 kW) 18 = 25.00 HP (18.50 kW) 19 = 30.00 HP (22.00 kW)	According to inverter model		cfg	MOTOR, STARTUP	12-11
P0405	Encoder Pulse Number	100 to 9999	1024		cfg	MOTOR, STARTUP	12-12
P0406	Motor Ventilation	0 = Self-Ventilated 1 = Separated Ventilation	0		cfg	MOTOR, STARTUP	12-12
P0407	Motor Rated Power Factor	0.50 to 0.99	0.80		cfg, V/f, VVW	MOTOR, STARTUP	10-6
P0408	Self-Tuning	0 = No 1 = No Rotation 2 = Run for I_m 3 = Run for T_m 4 = Estimate T_m	0		cfg, VVW, Vector	STARTUP	10-6
P0409	Stator Resistance	0.01 to 99.99 Ω	According to inverter model		V/f, cfg, VVW, Vector	MOTOR, STARTUP	10-6
P0410	Magnetization Current	0.0 to 100.0 A	0.0 A		Vector	MOTOR, STARTUP	12-22
P0411	Leakage Inductance	0.00 to 99.99	0.00		cfg, Vector	MOTOR, STARTUP	12-22
P0412	T_r Time Constant	0.000 to 9.999 s	0.000 s		Vector	MOTOR, STARTUP	12-22
P0413	T_m Time Constant	0.00 to 99.99 s	0.00 s		Vector	MOTOR, STARTUP	12-23
P0431	Number of Poles	2 to 24	6		VVW PM	STARTUP	11-3
P0435	Electromotive Constant Ke	0 to 6000	0		VVW PM	STARTUP	11-4
P0445	MTPA Setting	0 to 4.0	0.5		VVW PM	MOTOR	11-6
P0446	MTPA Proportional Gain	0 to 5.0	1.0		VVW PM	MOTOR	11-6
P0447	MTPA Integral Gain	0 to 0.5	0.012		VVW PM	MOTOR	11-7
P0448	Current Stabilizer	0 to 30.0	0.75		VVW PM	MOTOR	11-7
P0451	Initial Speed VVW PM	0 to 100.0 %	2.0 %		VVW PM	MOTOR	11-7
P0452	DQ Current Filter	0 to 1000 ms	1 ms		VVW PM	MOTOR	11-7
P0453	Aux. Ramp Time at Start	0 to 999.0 s	0.0 s		VVW PM	MOTOR	11-8
P0454	MTPA Minimum Voltage	0 to 100.0 %	100.0 %		VVW PM	MOTOR	11-8

Parameter	Description	Adjustable Range	Factory Setting	User Setting	Properties	Groups	Page
P0510	SoftPLC Eng. Unit 1	0 = None 1 = V 2 = A 3 = rpm 4 = s 5 = ms 6 = N 7 = m 8 = Nm 9 = mA 10 = % 11 = °C 12 = CV 13 = Hz 14 = HP 15 = h 16 = W 17 = kW 18 = kWh 19 = H	0			HMI, SPLC	5-7
P0511	Decimal Point SoftPLC Eng. Unit 1	0 = wxyz 1 = wxy.z 2 = wx.yz 3 = w.xyz	1			HMI, SPLC	5-8
P0512	SoftPLC Eng. Unit 2	See options in P0510	3			HMI, SPLC	5-8
P0513	Decimal Point SoftPLC Eng. Unit 2	See options in P0511	0			HMI, SPLC	5-9
P0520	PID Proportional Gain	0.000 to 9.999	1.000				15-8
P0521	PID Integral Gain	0.000 to 9.999	0.430				15-8
P0522	PID Differential Gain	0.000 to 9.999	0.000				15-8
P0525	PID Setpoint by HMI	0.0 to 100.0 %	0.0 %				15-9
P0526	PID Setpoint Filter	0 to 9999 ms	50 ms				15-9
P0527	PID Action Type	0 = Direct 1 = Reverse	0				15-9
P0528	Process Variable Scale Factor	10 to 30000	1000			HMI	15-10
P0529	Process Variable Indication Form	0 = wxyz 1 = wxy.z 2 = wx.yz 3 = w.xyz	1			HMI	15-10
P0533	X Process Variable Value	0.0 to 100.0 %	90.0 %			I/O	15-10
P0535	Wake Up Band	0.0 to 100.0 %	0.0 %			I/O	15-10
P0536	P0525 Automatic Setting	0 = Inactive 1 = Active	0		cfg		15-11
P0588	Maximum Torque Level	0 to 85 %	0 %		V/f, VVW	MOTOR, NET	9-13
P0589	Level of Minimum Applied Voltage	8 to 40 %	40 %		V/f, VVW	MOTOR, NET	9-13
P0590	Minimum Speed Level	360 to 18000 rpm	600 rpm		V/f, VVW	MOTOR, NET	9-13
P0591	Hysteresis for the Maximum Torque Level	0 to 30 %	10 %		V/f, VVW	MOTOR, NET	9-14
P0613	Software Revision	-32768 to 32767	According to Software revision		ro	READ	6-5

Parameter	Description	Adjustable Range	Factory Setting	User Setting	Properties	Groups	Page
P0680	Logical Status	0000h to FFFFh Bit 0 = Reserved Bit 1 = Run Command Bit 2 and 3 = Reserved Bit 4 = Quick Stop Bit 5 = 2nd Ramp Bit 6 = Config. status Bit 7 = Alarm Bit 8 = Running Bit 9 = Enabled Bit 10 = Clockwise Bit 11 = JOG Bit 12 = Remote Bit 13 = Undervoltage Bit 14 = Automatic (PID) Bit 15 = Fault			ro	READ, NET	7-14
P0681	Speed at 13 bits	-32768 to 32767			ro	READ, NET	19-7
P0682	Serial/USB Control	0000h to FFFFh Bit 0 = Ramp Enable Bit 1 = General Enable Bit 2 = Run Clockwise Bit 3 = JOG Enable Bit 4 = Remote Bit 5 = 2nd Ramp Bit 6 = Quick Stop Bit 7 = Fault Reset Bit 8 to 15 = Reserved			ro	NET	7-15
P0683	Serial/USB Speed Ref.	-32768 to 32767			ro	NET	19-3
P0684	CO/DN/PB/Eth Control	See options in P0682			ro	NET	7-15
P0685	CO/DN/PB/Eth Speed Ref.	-32768 to 32767			ro	NET	19-3
P0690	Logical Status 2	0000h to FFFFh Bit 0 to 3 = Reserved Bit 4 = Fs Reduction Bit 5 = Sleep Mode Bit 6 = Decel. Ramp Bit 7 = Accel. Ramp Bit 8 = Frozen Ramp Bit 9 = Setpoint Ok Bit 10 = DC Link Regulation Bit 11 = Config. in 50 Hz Bit 12 = Ride-Through Bit 13 = Flying Start Bit 14 = DC Braking Bit 15 = PWM Pulses			ro	READ, NET	7-14
P0695	DOx Value	Bit 0 = DO1 Bit 1 = DO2 Bit 2 = DO3 Bit 3 = DO4 Bit 4 = DO5			ro	NET	19-7
P0696	AOx Value 1	-32768 to 32767			ro	NET	19-7
P0697	AOx Value 2	-32768 to 32767			ro	NET	19-7
P0698	AOx Value 3	-32768 to 32767			ro	NET	19-7
P0700	CAN Protocol	1 = CANopen 2 = DeviceNet 3 = Reserved	2			NET	19-3
P0701	CAN Address	0 to 127	63			NET	19-3
P0702	CAN Baud Rate	0 = 1 Mbps/Auto 1 = Reserved/Auto 2 = 500 Kbps 3 = 250 Kbps 4 = 125 Kbps 5 = 100 Kbps/Auto 6 = 50 Kbps/Auto 7 = 20 Kbps/Auto 8 = 10 Kbps/Auto	0			NET	19-3
P0703	Bus Off Reset	0 = Manual 1 = Automatic	0			NET	19-3

Parameter	Description	Adjustable Range	Factory Setting	User Setting	Properties	Groups	Page
P0705	CAN Controller Status	0 = Disable 1 = Auto-baud 2 = CAN Enabled 3 = Warning 4 = Error Passive 5 = Bus Off 6 = No Bus Power			ro	NET	19-3
P0706	CAN RX Telegrams	0 to 65535			ro	NET	19-4
P0707	CAN TX Telegrams	0 to 65535			ro	NET	19-4
P0708	Bus Off Counter	0 to 65535			ro	NET	19-4
P0709	CAN Lost Messages	0 to 65535			ro	NET	19-4
P0710	DeviceNet I/O Instances	0 = ODVA Basic 2W 1 = ODVA Extend 2W 2 = Manuf. Spec.2W 3 = Manuf. Spec.3W 4 = Manuf. Spec.4W 5 = Manuf. Spec.5W 6 = Manuf. Spec.6W	0			NET	19-4
P0711	DeviceNet Reading #3	0 to 1199	0			NET	19-4
P0712	DeviceNet Reading #4	0 to 1199	0			NET	19-4
P0713	DeviceNet Reading #5	0 to 1199	0			NET	19-4
P0714	DeviceNet Reading #6	0 to 1199	0			NET	19-4
P0715	DeviceNet Writing #3	0 to 1199	0			NET	19-4
P0716	DeviceNet Writing #4	0 to 1199	0			NET	19-4
P0717	DeviceNet Writing #5	0 to 1199	0			NET	19-4
P0718	DeviceNet Writing #6	0 to 1199	0			NET	19-4
P0719	DeviceNet Network Status	0 = Offline 1 = OnLine, Not Conn. 2 = OnLine Connect. 3 = Connection Timed out 4 = Link Failure 5 = Auto-Baud			ro	NET	19-4
P0720	DNet Master Status	0 = Run 1 = Idle			ro	NET	19-4
P0721	CANopen Com. Status	0 = Disabled 1 = Reserved 2 = Communic. Enabled 3 = Error Ctrl. Enable 4 = Guarding Error 5 = Heartbeat Error			ro	NET	19-4
P0722	CANopen Node Status	0 = Disabled 1 = Initialization 2 = Stopped 3 = Operational 4 = Preoperational			ro	NET	19-4
P0740	Profibus Com. Status	0 = Disabled 1 = Access Error 2 = Offline 3 = Config. Error 4 = Parameter Error 5 = Clear Mode 6 = Online			ro	NET	19-4
P0741	Profibus Data Profile	0 = PROFIdrive 1 = Manufacturer	1			NET	19-4
P0742	Profibus Reading #3	0 to 1199	0			NET	19-4
P0743	Profibus Reading #4	0 to 1199	0			NET	19-4
P0744	Profibus Reading #5	0 to 1199	0			NET	19-4
P0745	Profibus Reading #6	0 to 1199	0			NET	19-5
P0746	Profibus Reading #7	0 to 1199	0			NET	19-5
P0747	Profibus Reading #8	0 to 1199	0			NET	19-5
P0750	Profibus Writing #3	0 to 1199	0			NET	19-5
P0751	Profibus Writing #4	0 to 1199	0			NET	19-5
P0752	Profibus Writing #5	0 to 1199	0			NET	19-5

Parameter	Description	Adjustable Range	Factory Setting	User Setting	Properties	Groups	Page
P0753	Profibus Writing #6	0 to 1199	0			NET	19-5
P0754	Profibus Writing #7	0 to 1199	0			NET	19-5
P0755	Profibus Writing #8	0 to 1199	0			NET	19-5
P0800	Eth: Module Identification	0 = Not Identified 1 = Modbus TCP 2 = EtherNet/IP 3 = PROFINET IO			ro	READ, NET	19-5
P0801	Eth: Communication Status	0 = Setup 1 = Init 2 = Wait Comm 3 = Idle 4 = Data Active 5 = Error 6 = Reserved 7 = Exception 8 = Access Error			ro	READ, NET	19-5
P0803	Eth: Baud Rate	0 = Auto 1 = 10 Mbit, Half Duplex 2 = 10 Mbit, Full Duplex 3 = 100 Mbit, Half Duplex 4 = 100 Mbit, Full Duplex	0			NET	19-5
P0806	Eth: Modbus TCP Timeout	0.0 to 65.5	0.0			NET	19-5
P0810	Eth: IP Address Config	0 = Parameters 1 = DHCP	1			NET	19-5
P0811	Eth: IP Address 1	0 to 255	192			NET	19-5
P0812	Eth: IP Address 2	0 to 255	168			NET	19-5
P0813	Eth: IP Address 3	0 to 255	0			NET	19-5
P0814	Eth: IP Address 4	0 to 255	14			NET	19-5
P0815	Eth: CIDR Sub-net	1 to 31	24			NET	19-6
P0816	Eth: Gateway 1	0 to 255	0			NET	19-6
P0817	Eth: Gateway 2	0 to 255	0			NET	19-6
P0818	Eth: Gateway 3	0 to 255	0			NET	19-6
P0819	Eth: Gateway 4	0 to 255	0			NET	19-6
P0820	Eth: Read Word #3	0 to 9999	0			NET	19-6
P0821	Eth: Read Word #4	0 to 9999	0			NET	19-6
P0822	Eth: Read Word #5	0 to 9999	0			NET	19-6
P0823	Eth: Read Word #6	0 to 9999	0			NET	19-6
P0824	Eth: Read Word #7	0 to 9999	0			NET	19-6
P0825	Eth: Read Word #8	0 to 9999	0			NET	19-6
P0826	Eth: Read Word #9	0 to 9999	0			NET	19-6
P0827	Eth: Read Word #10	0 to 9999	0			NET	19-6
P0828	Eth: Read Word #11	0 to 9999	0			NET	19-6
P0829	Eth: Read Word #12	0 to 9999	0			NET	19-6
P0830	Eth: Read Word #13	0 to 9999	0			NET	19-6
P0831	Eth: Read Word #14	0 to 9999	0			NET	19-6
P0835	Eth: Write Word #3	0 to 9999	0			NET	19-6
P0836	Eth: Write Word #4	0 to 9999	0			NET	19-6
P0837	Eth: Write Word #5	0 to 9999	0			NET	19-6
P0838	Eth: Write Word #6	0 to 9999	0			NET	19-6
P0839	Eth: Write Word #7	0 to 9999	0			NET	19-6
P0840	Eth: Write Word #8	0 to 9999	0			NET	19-6
P0841	Eth: Write Word #9	0 to 9999	0			NET	19-6
P0842	Eth: Write Word #10	0 to 9999	0			NET	19-6
P0843	Eth: Write Word #11	0 to 9999	0			NET	19-7
P0844	Eth: Write Word #12	0 to 9999	0			NET	19-7
P0845	Eth: Write Word #13	0 to 9999	0			NET	19-7
P0846	Eth: Write Word #14	0 to 9999	0			NET	19-7
P0849	Eth: Configuration Update	0 = Normal Operation 1 = Configuration Update	0			NET	19-7
P0918	Profibus Address	1 to 126	1			NET	19-5

Parameter	Description	Adjustable Range	Factory Setting	User Setting	Properties	Groups	Page
P0922	Profibus Teleg. Sel.	2 = Standard Telegram 1 3 = Telegram 103 4 = Telegram 104 5 = Telegram 105 6 = Telegram 106 7 = Telegram 107 8 = Telegram 108	2			NET	19-5
P0963	Profibus Baud Rate	0 = 9.6 kbit/s 1 = 19.2 kbit/s 2 = 93.75 kbit/s 3 = 187.5 kbit/s 4 = 500 kbit/s 5 = Not Detected 6 = 1500 kbit/s 7 = 3000 kbit/s 8 = 6000 kbit/s 9 = 12000 kbit/s 10 = Reserved 11 = 45.45 kbit/s			ro	NET	19-5
P0967	Control Word 1	Bit 0 = ON Bit 1 = No Coast Stop Bit 2 = No Quick Stop Bit 3 = Enable Operation Bit 4 = Enable Ramp Generator Bit 5 = Reserved Bit 6 = Enable Setpoint Bit 7 = Fault Acknowledge Bit 8 = JOG 1 ON Bit 9 = Reserved Bit 10 = Control By PLC Bit 11 to 15 = Reserved			ro	NET	19-5
P0968	Status Word 1	Bit 0 = Ready to Switch ON Bit 1 = Ready to Operate Bit 2 = Operation Enabled Bit 3 = Fault Present Bit 4 = Coast Stop Not Active Bit 5 = Quick Stop Not Active Bit 6 = Switching ON Inhibited Bit 7 = Warning Present Bit 8 = Reserved Bit 9 = Control Requested Bit 10 to 15 = Reserved			ro	NET	19-5
P1000	SoftPLC Status	0 = No App. 1 = Installing App. 2 = Incompat. App. 3 = App. Stopped 4 = App. Running	0		ro	SPLC	20-1
P1001	SoftPLC Command	0 = Stop App 1 = Run App 2 = Stop App 3 = Stop App 4 = Stop App 5 = Delete App	0...5		cfg	SPLC	20-1
P1002	Scan Cycle Time	0 to 65535 ms			ro	SPLC	20-2
P1004	Area for SoftPLC Application not Running	0 = Inactive 1 = Generate Alarm 2 = Generate Fault	0		cfg	SPLC	20-2
P1008	Lag Error	-9999 to 9999			ro, Enc	SPLC	20-2
P1009	Position Gain	0 to 6553.5	10.0		Enc	SPLC	20-3
P1010	SoftPLC Parameter 1	-32768 to 32767	0			SPLC	20-3
P1011	SoftPLC Parameter 2	-32768 to 32767	0			SPLC	20-3
P1012	SoftPLC Parameter 3	-32768 to 32767	0			SPLC	20-3
P1013	SoftPLC Parameter 4	-32768 to 32767	0			SPLC	20-3
P1014	SoftPLC Parameter 5	-32768 to 32767	0			SPLC	20-3
P1015	SoftPLC Parameter 6	-32768 to 32767	0			SPLC	20-3
P1016	SoftPLC Parameter 7	-32768 to 32767	0			SPLC	20-3
P1017	SoftPLC Parameter 8	-32768 to 32767	0			SPLC	20-3
P1018	SoftPLC Parameter 9	-32768 to 32767	0			SPLC	20-3
P1019	SoftPLC Parameter 10	-32768 to 32767	0			SPLC	20-3
P1020	SoftPLC Parameter 11	-32768 to 32767	0			SPLC	20-3
P1021	SoftPLC Parameter 12	-32768 to 32767	0			SPLC	20-3

Parameter	Description	Adjustable Range	Factory Setting	User Setting	Properties	Groups	Page
P1022	SoftPLC Parameter 13	-32768 to 32767	0			SPLC	20-3
P1023	SoftPLC Parameter 14	-32768 to 32767	0			SPLC	20-3
P1024	SoftPLC Parameter 15	-32768 to 32767	0			SPLC	20-3
P1025	SoftPLC Parameter 16	-32768 to 32767	0			SPLC	20-3
P1026	SoftPLC Parameter 17	-32768 to 32767	0			SPLC	20-3
P1027	SoftPLC Parameter 18	-32768 to 32767	0			SPLC	20-3
P1028	SoftPLC Parameter 19	-32768 to 32767	0			SPLC	20-3
P1029	SoftPLC Parameter 20	-32768 to 32767	0			SPLC	20-3
P1030	SoftPLC Parameter 21	-32768 to 32767	0			SPLC	20-3
P1031	SoftPLC Parameter 22	-32768 to 32767	0			SPLC	20-3
P1032	SoftPLC Parameter 23	-32768 to 32767	0			SPLC	20-3
P1033	SoftPLC Parameter 24	-32768 to 32767	0			SPLC	20-3
P1034	SoftPLC Parameter 25	-32768 to 32767	0			SPLC	20-3
P1035	SoftPLC Parameter 26	-32768 to 32767	0			SPLC	20-3
P1036	SoftPLC Parameter 27	-32768 to 32767	0			SPLC	20-3
P1037	SoftPLC Parameter 28	-32768 to 32767	0			SPLC	20-3
P1038	SoftPLC Parameter 29	-32768 to 32767	0			SPLC	20-3
P1039	SoftPLC Parameter 30	-32768 to 32767	0			SPLC	20-3
P1040	SoftPLC Parameter 31	-32768 to 32767	0			SPLC	20-3
P1041	SoftPLC Parameter 32	-32768 to 32767	0			SPLC	20-3
P1042	SoftPLC Parameter 33	-32768 to 32767	0			SPLC	20-3
P1043	SoftPLC Parameter 34	-32768 to 32767	0			SPLC	20-3
P1044	SoftPLC Parameter 35	-32768 to 32767	0			SPLC	20-3
P1045	SoftPLC Parameter 36	-32768 to 32767	0			SPLC	20-3
P1046	SoftPLC Parameter 37	-32768 to 32767	0			SPLC	20-3
P1047	SoftPLC Parameter 38	-32768 to 32767	0			SPLC	20-3
P1048	SoftPLC Parameter 39	-32768 to 32767	0			SPLC	20-3
P1049	SoftPLC Parameter 40	-32768 to 32767	0			SPLC	20-3
P1050	SoftPLC Parameter 41	-32768 to 32767	0			SPLC	20-3
P1051	SoftPLC Parameter 42	-32768 to 32767	0			SPLC	20-3
P1052	SoftPLC Parameter 43	-32768 to 32767	0			SPLC	20-3
P1053	SoftPLC Parameter 44	-32768 to 32767	0			SPLC	20-3
P1054	SoftPLC Parameter 45	-32768 to 32767	0			SPLC	20-3
P1055	SoftPLC Parameter 46	-32768 to 32767	0			SPLC	20-3
P1056	SoftPLC Parameter 47	-32768 to 32767	0			SPLC	20-3
P1057	SoftPLC Parameter 48	-32768 to 32767	0			SPLC	20-3
P1058	SoftPLC Parameter 49	-32768 to 32767	0			SPLC	20-3
P1059	SoftPLC Parameter 50	-32768 to 32767	0			SPLC	20-3

ro = Read only parameter.
V/f = Parameter available in V/f mode.
cfg = Configuration parameter, value can only be changed with the motor stopped.
VVW = Parameter available in VVW mode.
Vector = Parameter available in vector mode.
Sless = Parameter available only in sensorless mode.

Enc = Parameter available only in vector mode with encoder.

Fault / Alarm	Description	Possible Causes
A0046 Motor Overload	Motor overload alarm.	■ Settings of P0156, P0157, and P0158 are too low for the used motor. ■ Overload on the motor shaft.
A0047 IGBT Overload	Overload alarm on the power pack with IGBTs.	■ Inverter output overcurrent.
A0050 Power Module Overtemperature	Overtemperature alarm from the power module temperature sensor (NTC).	■ High ambient temperature around the inverter (> 50 °C (> 122 °F)) and high output current. ■ Blocked or defective fan. ■ Heatsink is too dirty, preventing the air flow.
A0090 External Alarm	External alarm via DIx (option "No External Alarm" in P026x).	■ Wiring on DI1 to DI8 inputs are open or have poor contact.
A0098 Interruption of Self-tuning	It indicates interruption of self-tuning.	■ It indicates that the drive is disabled via DIx, when self-tuning is run (P0408).
A0128 Telegram Reception Timeout	Alarm that indicates serial communication fault. It indicates the equipment stopped receiving valid serial telegrams for a period longer than the setting in P0314.	■ Check network installation, broken cable or fault/poor contact on the connections with the network, grounding. ■ Ensure the master always sends telegrams to the equipment in a time shorter than the setting in P0314. ■ Disable this function in P0314.
A0133 No Supply on CAN Interface	It indicates that the CAN interface has no supply between pins 1 and 5 of the connector.	■ Measure if there is voltage within the allowed range between the pins 1 and 5 of the CAN interface connector. ■ Check if the supply cables are not misconnected or inverted. ■ Check for contact problems on the cable or connector of the CAN interface.
A0134 Bus Off	Bus off error detected on the CAN interface.	■ Check for short-circuit on the CAN circuit transmission cable. ■ Check if the cables are not misconnected or inverted. ■ Check if all the network devices use the same baud rate. ■ Check if the termination resistors with the right value were installed only at the end of the main bus. ■ Check if the CAN network was properly installed.
A0135 Node Guarding/ Heartbeat	CANopen communication error control detected communication error using the guarding mechanism.	■ Check the times set on the master and on the slave to exchange messages. In order to prevent problems due to transmission delays and time counting, it is recommended that the values set for error detection by the slave be multiples of the times set for message exchange on the master. ■ Check if the master is sending the guarding telegrams in the time set. ■ Check the problems in the communications that may cause missing telegrams or transmission delays.
A0136 Idle Master	Alarm indicates that the DeviceNet network master is in Idle mode.	■ Set the switch that controls the master operation for Run or the corresponding bit on the configuration word of the master software. If further information is needed, refer to the documentation of the master used.
A0137 DeviceNet Connection Timeout	Alarm that indicates that one or more DeviceNet connections timed out.	■ Check the network master status. ■ Check network installation, broken cable or fault/poor contact on the connections with the network.
A0138 Profibus DP Interface in Clear Mode	It indicates that the inverter received the command from the Profibus DP network master to go into clear mode.	■ Check the network master status, ensuring it is in the run mode.
A0139 Offline Profibus DP Interface	It indicates interruption in the communication between the Profibus DP network master and the inverter. The Profibus DP communication interface went into offline status.	■ Check if the network master is correctly configured and operating properly. ■ Check for short-circuit or poor contact on the communication cables. ■ Check if the cables are not misconnected or inverted. ■ Check if the termination resistors with the right value were installed only at the end of the main bus. ■ Check the network installation in general – cabling, grounding.
A0140 Profibus DP Module Access Error	It indicates error in the access to the Profibus DP communication module data.	■ Check if the Profibus DP module is correctly fitted. ■ Hardware errors due to improper handling or installation of the accessory, for instance, may cause this error. If possible, carry out tests by replacing the communication accessory.
A0148 Ethernet Interface Access Error	Indicates error in data exchange between CFW500 frequency inverter and Ethernet module.	■ Check if Ethernet module is properly connected to product. ■ Check it the device firmware version supports this module. ■ Hardware errors caused by the improper handling or installation of the accessory can cause this error. If possible, test it by replacing the communication module.

Fault / Alarm	Description	Possible Causes
A0149 Ethernet Offline	Indicates communication failure between the slave and the network controller.	■ Verify whether the network master is properly configured and operating normally. ■ Search for short-circuit or bad contact in the communication cables. ■ Verify the entire network installation – cable laying, grounding.
A0163 Signal Fault AIx 4..20 mA	Analog input signal AIx at 4 to 20 mA or 20 to 4 mA is below 2 mA.	■ Current signal on the analog input AIx interrupted or null. ■ Error in the parameterization of analog input AIx.
A0168 Speed Error too High	Difference between Speed Reference and Effective Speed greater than the setting in P0360.	■ Inverter in Torque Current Limitation.
A0177 Fan Replacement	Fan replacement alarm (P0045 > 50000 hours).	■ The heatsink fan maximum number of operating hours has been reached.
A0210 Drive in Bypass Mode	Indicates that the drive is in Bypass mode.	■ The digital input programmed for activating the Bypass mode is active.
A0211 Drive in Fire Mode	Indicates that the drive is in Fire Mode.	■ The digital input programmed for activating the Fire Mode is active.
A0213 Protection Against Short Cycles	Alarm that indicates the short cycle protection occurred.	■ The STAR command occurred during the time count defined by P0587. ■ The STOP command occurred during the time count defined by P0586.
A0700 Communication Fault with Remote HMI	No communication with remote HMI, but there is no speed command or reference for this source.	■ Check if the communication interface with the HMI is properly configured in parameter P0312. ■ HMI cable disconnected.
A0702 Inverter Disabled	This failure occurs when there is a SoftPLC movement block (REF block) active and the "General Enable" command is disabled.	■ Check if the drive General Enable command is active.
A0704 Two Movem. Enabled	It occurs when 2 or more SoftPLC movement blocks (REF Block) are enabled at the same time.	■ Check the user's program logic.
A0706 Refer. Not Progr. SPLC	This failure occurs when a SoftPLC movement block is enabled and the speed reference is not programmed for the SoftPLC.	■ Check the programming of the references in the Local and/or Remote mode (P0221 and P0222).
A0708 SPLC Application Stopped	SoftPLC application not running.	■ SoftPLC application stopped (P1001 = 0 and P1000 = 3). ■ SoftPLC state presents incompatible application with the CFW500 firmware version.
A0710 SPLC Progr. Bigger than 8 KB	This failure occurs when the user tries to download a SoftPLC program bigger than 8 Kb.	■ Extension of the SoftPLC Prog. exceeded 8 KBytes.
A0750 Program AIx for Process Variable of Main PID Controller	Alarm that indicates an analog input was not programmed for the process variable of the main PID controller.	■ Parameter P0231 or P0236 was not programmed for 5 or 6.
A0752 Program DIx for Automatic / Manual Selection of the Main PID Controller	Alarm that indicates a digital input was not programmed for automatic / manual selection of the main PID controller.	■ Parameter P0263 or P0264 or P0265 or P0266 was not programmed for 20.
A0754 Program LOCAL Reference (P0221) for SoftPLC	Alarm that indicates the origin of the speed reference in LOCAL mode was not programmed for SoftPLC.	■ Main PID controller is enabled (P1017 in 1 or 2) and the CFW500 frequency inverter is running the motor in LOCAL mode and parameter P0221 is not programmed for 7.
A0756 Program REMOTE Reference (P0222) for SoftPLC	Alarm that indicates the origin of the speed reference in REMOTE mode was not programmed for SoftPLC.	■ Main PID controller is enabled (P1017 in 1 or 2) and the CFW500 frequency inverter is running the motor in REMOTE mode and parameter P0222 is not programmed for 7.
A0758 Program Indirect Engineering Unit 4 (P0516) for Hz or rpm	Alarm that indicates the parameter for engineering unit of the motor speed was not programmed for Hz or rpm.	■ Parameter P0516 was not programmed for 13 (Hz) or 3 (rpm).
A0760 Low Level of the Process Variable of the Main PID Controller	Alarm that indicates the process variable of the main PID controller has a low value.	■ Parameter P1030 is programmed for 1 and the value of the process variable of the main PID controller remained below the value programmed in P1031 for the time programmed in P1032.

Fault / Alarm	Description	Possible Causes
A0762 High Level in the Process Variable of the Main PID Controller	Alarm that indicates the process variable of the main PID controller has a high value.	■ Parameter P1030 is programmed for 1 and the value of the process variable of the main PID controller remained above the value programmed in P1033 for the time programmed in P1034.
A0764 Frequency Inverter in Sleep Mode	Alarm that indicates the CFW500 frequency inverter is in the sleep mode.	■ Main PID controller is enabled and in automatic mode, and the motor speed remained below the speed programmed in P1036 for the time programmed in P1037.
A0766 Dry Pump Detected	Alarm that indicates the dry pump condition was detected for the pump driven by the CFW500 frequency inverter.	■ Parameter P1042 is programmed for 1 and the pump driven by the CFW500 frequency inverter is running with speed above the speed programmed in P1043 and the motor torque remained below the value programmed in P1044 for the time programmed in P1045.
A0768 Broken Belt Detected	Alarm that indicates the broken belt condition was detected for the motor driven by the CFW500 frequency inverter.	■ Parameter P1046 is programmed for 1 and the motor driven by the CFW500 frequency inverter is running with speed above the speed programmed in P1047 and the motor torque remained below the value programmed in P1048 for the time programmed in P1049.
A0770 Filter Maintenance	Alarm that indicates the need of replacing the system filter.	■ Parameter P1050 is programmed for 1 and the operation time of the motor driven by the CFW500 frequency inverter shown in P1052 is above the value programmed in P1051.
A0780 Program AIx for Process Variable of the External PID Controller	Alarm that indicates an analog input was not programmed for the process variable of the external PID controller.	■ Parameter P0231 or P0236 was not programmed for 8.
A0782 Program DIx for Automatic / Manual Selection of the External PID Controller	Alarm that indicates a digital input was not programmed for automatic / manual selection of the external PID controller.	■ Parameter P0263 or P0264 or P0265 or P0266 was not programmed for 21.
A0784 Program AOx for Output of the External PID Controller	Alarm that indicates an analog output was not programmed for output of the external PID controller.	■ Parameter P0251 or P0254 was not programmed for 16.
A0786 Low Level of the Process Variable of the External PID Controller	Alarm that indicates the process variable of the external PID controller has a low value.	■ Parameter P1075 is programmed for 1 and the value of the process variable of the external PID controller remained below the value programmed in P1076 for the time programmed in P1077.
A0788 High Level of the Process Variable of the External PID Controller	Alarm that indicates the process variable of the external PID controller has a high value.	■ Parameter P1075 is programmed for 1 and the value of the process variable of the external PID controller remained above the value programmed in P1078 for the time programmed in P1079.
F0021 Undervoltage on the DC Link	Undervoltage fault on the intermediate circuit.	■ Wrong voltage supply; check if the data on the inverter label comply with the power supply and parameter P0296. ■ Supply voltage too low, producing voltage on the DC Link below the minimum value (in P0004): Ud < 200 Vdc in 200-240 Vac (P0296 = 0). Ud < 360 Vdc in 380-480 Vac (P0296 = 1). Ud < 500 Vdc in 500-600 Vac (P0296 = 2). ■ Phase fault in the input. ■ Fault in the pre-charge circuit.
F0022 Overvoltage on the DC Link	Overvoltage fault on the intermediate circuit.	■ Wrong voltage supply; check if the data on the inverter label comply with the power supply and parameter P0296. ■ Supply voltage is too high, producing voltage on the DC Link above the maximum value (in P0004): Ud > 410 Vdc in 200-240 Vac (P0296 = 0). Ud > 810 Vdc in 380-480 Vac (P0296 = 1). Ud > 1000 Vdc in 500-600 Vac (P0296 = 2). ■ Load inertia is too high or deceleration ramp is too fast. ■ P0151, P0153 or P0185 setting is too high.
F0031 Communication Fault with Plug-in Module	Main control cannot set a communication link with the plug-in module.	■ Plug-in module is damaged. ■ Plug-in module is not properly connected. ■ Problem in the identification of the plug-in module; refer to P0027 for further information.
F0032 Fault in the Plug-in Module Connection	Plug-in Module was incorrectly disconnected with the VSD powered up.	■ Plug-In Module is damaged. ■ Plug-In Module is not properly connected. ■ Problem in the identification of the Plug-In Module; see P0027.

Fault / Alarm	Description	Possible Causes
F0033 Self-tuning Fault	Stator resistance setting fault P0409.	■ Stator resistance value in P0409 does not comply with the inverter power. ■ Motor connection error; turn off the power supply and check the motor terminal box and the connections with the motor terminals. ■ Motor power too low or too high in relation to the inverter.
F0048 Overload on the IGBTs	Overload fault on the power pack with IGBTs (3 s in 1.5xI_{nom}).	■ Inverter output overcurrent (>2xI_{nom}).
F0051 IGBTs Overtemperature	Overtemperature fault measured on the temperature sensor of the power pack.	■ High ambient temperature around the inverter (>50 °C (>122 °F)) and high output current. ■ Blocked or defective fan. ■ Heatsink is too dirty, preventing the air flow.
F0068 Motor Overtemperature (dedicated input)	Overtemperature fault measured on the motor temperature sensor (Triple PTC) via dedicated circuitry in the power scheme.	■ Overload on the motor shaft. ■ Load cycle is too high (high number of starts and stops per minute). ■ High ambient temperature around the motor. ■ Poor contact or short circuit (3 k9 < RPTC < 0 k1). ■ Motor thermistor not installed. ■ Motor shaft is stuck.
F0070 Overcurrent/Short-circuit	Overcurrent or short-circuit on the output, DC Link or braking resistor.	■ Short-circuit between two motor phases. ■ Short-circuit of the rheostatic braking resistor connecting cables. ■ IGBTs module in short-circuit or damaged. ■ Start with too short acceleration ramp. ■ Start with motor spinning without the Flying Start function.
F0072 Motor Overload	Motor overload fault (60 s in 1.5xInom).	■ P0156, P0157 and P0158 setting is too low in relation to the motor operating current. ■ Overload on the motor shaft.
F0074 Ground Fault	Ground overcurrent fault. **Note:** This failure may be disabled by setting P0343 = 0.	■ Short-circuit to the ground in one or more output phases. ■ Motor cable capacitance too high, causing current peaks in the output.
F0076 Motor Connection Error	This fault indicates the motor presents phase loss, imbalanced phase current or is disconnected.	■ Motor wiring or connection error. ■ Loss of motor connection with the drive or broken wire.
F0078 Motor Overtemperature	Overtemperature fault measured on the motor temperature sensor (Triple PTC) via analog input AIx or digital input DIx.	■ Overload on the motor shaft. ■ Load cycle is too high (high number of starts and stops per minute). ■ High ambient temperature around the motor. ■ Poor contact or short-circuit (3k9 < RPTC < 0k1). ■ Motor thermistor not installed. ■ Motor shaft is stuck.
F0079 Encoder Signal Fault	Failure of absence of encoder signals.	■ Wiring between encoder and the accessory interface encoder interrupted. ■ Defective encoder.
F0080 CPU Fault (Watchdog)	Fault related to the supervision algorithm of the inverter main CPU.	■ Electric noise. ■ Inverter firmware fault.
F0084 Auto-diagnosis Fault	Fault related to the automatic identification algorithm of the inverter hardware and plug-in module.	■ Poor contact in the connection between the main control and the power pack. ■ Hardware not compatible with the firmware version. ■ Defect on the internal circuits of the inverter.
F0085 Plug-in Module Will not Start	Failure in the initialization of the plug-in module.	■ Defect on the plug-in module. ■ Poor contact on the connections of the plug-in module to the inverter. ■ Plug-in module without firmware.
F0091 External Fault	External fault via DIx ("No External Fault" in P026x).	■ Wiring on DI1 to DI8 inputs are open or have poor contact.
F0150 Motor Overspeed	Overspeed fault. It is activated when the real speed exceeds the value of P0134 x (100 % + P0132) for more than 20 ms.	■ Wrong settings of P0161 and/or P0162. ■ Problem with the hoist-type load.
F0151 Incomp. Main Sw Version	Main firmware version is different from the plug-in firmware version.	■ Blank memory on plug-in module (1st power-up). ■ Data backup fault during power-down.
F0169 Speed Error too High	Difference between Speed Reference and Effective Speed greater than the setting in P0360 for longer than P0361.	■ Inverter in Torque Current Limitation for too long.

Fault / Alarm	Description	Possible Causes
F0179 Fan Low Speed	Internal fan with speed (P0036) under 2/3 of rated fan speed.	■ Internal fan failure.
F0182 Pulse Feedback Fault	Pulse feedback circuit fault of the output voltage. **Note:** it may be turned off in P0397.	■ Hardware identification fault; compare P0295 and P0296 to the inverter identification label. ■ Inverter internal pulse feedback circuit fault.
F0228 Telegram Reception Timeout	Indicates fault in the serial communication. It indicates the equipment stopped receiving valid serial telegrams for a period longer than the setting in P0314.	■ Pulse feedback input circuit fault. ■ Check network installation, broken cable or fault/poor contact on the connections with the network, grounding. ■ Ensure the master always sends telegrams to the equipment in a time shorter than the setting in P0314. ■ Disable this function in P0314.
F0233 No Supply on CAN Interface	This failure indicates that the CAN interface has no supply between pins 1 and 5 of the connector.	■ Measure if there is voltage within the allowed range between the pins 1 and 5 of the CAN interface connector. ■ Check if the supply cables are not misconnected or inverted. ■ Check for contact problems on the cable or connector of the CAN interface.
F0234 Bus Off	Bus off error detected on the CAN interface.	■ Check for short-circuit on the CAN circuit transmission cable. ■ Check if the cables are not misconnected or inverted. ■ Check if all the network devices use the same baud rate. ■ Check if the termination resistors are with correct values and have been installed only at the end of the main bus. ■ Check if the CAN network was properly installed.
F0235 Node Guarding/ Heartbeat	CANopen communication error control detected communication error using the guarding mechanism.	■ Check the times set on the master and on the slave to exchange messages. In order to prevent problems due to transmission delays and time counting, it is recommended that the values set for error detection by the slave be multiples of the times set for message exchange on the master. ■ Check if the master is sending the guarding telegrams in the time set. ■ Check the problems in the communications that may cause missing telegrams or transmission delays.
F0236 Idle Master	Fault indicates that the DeviceNet network master is in Idle mode.	■ Set the switch that controls the master operation for Run or the corresponding bit on the configuration word of the master software. If further information is needed, refer to the documentation of the master used.
F0237 DeviceNet Connection Timeout	Fault that indicates that one or more DeviceNet connections timed out.	■ Check the network master status. ■ Check network installation, broken cable or fault/poor contact on the connections with the network.
F0238 Profibus DP Interface in Clear Mode	It indicates that the inverter received the command from the Profibus DP network master to go into clear mode.	■ Check the network master status, ensuring it is in the run mode.
F0239 Profibus DP Interface Offline	It indicates interruption in the communication between the Profibus DP network master and the inverter. The Profibus DP communication interface went into offline status.	■ Check if the network master is correctly configured and operating properly. ■ Check for short-circuit or poor contact on the communication cables. ■ Check if the cables are not misconnected or inverted. ■ Check if the termination resistors with the right value were installed only at the end of the main bus. ■ Check the network installation in general – cabling, grounding.
F0240 Profibus DP Module Access Fault	It indicates fault in the access to the Profibus DP communication module data.	■ Check if the Profibus DP module is correctly fitted. ■ Hardware errors due to improper handling or installation of the accessory, for instance, may cause this fault. If possible, carry out tests by replacing the communication accessory.
F0700 Remote HMI Communication Fault	No communication with remote HMI, but there is speed command or reference for this source.	■ Check if the communication interface with the HMI is properly configured in parameter P0312. ■ HMI cable disconnected.
F0701 Remote HMI Communication Fault	No communication with the remote HMI; however, there is command or frequency reference for this source.	■ Check that the HMI communication interface is properly configured in parameter P0312. ■ HMI cable disconnected.
F0709 SPLC Application Stopped	SoftPLC application not running.	■ SoftPLC application stopped (P1001 = 0 and P1000 = 3). ■ SoftPLC state presents incompatible application with the CFW500 firmware version.
F0710 Size of the SoftPLC Application	The size of the SoftPLC user's program exceeded the maximum memory capacity.	■ The total size of the user's program is 8 Kilobytes for V/f scalar control (P0202 = 0) or VVW control (P0202 = 5). However, for vector control, such memory size is reduced to 7 Kilobytes.

Fault / Alarm	Description	Possible Causes
F0711 Fault on SoftPLC Application	Fault found in SoftPLC user's program.	■ SoftPLC user's program stored on flash memory is corrupted. ■ Timeout during execution of SoftPLC scan cycle.
F0761 Low Level of the Process Variable of the Main PID Controller	Fault that indicates the process variation of the main PID controller has a low value.	■ Parameter P1030 is programmed for 2 and the value of the process variation of the main PID controller remained below the value programmed in P1031 for the time programmed in P1032.
F0763 High Level in the Process Variable of the Main PID Controller	Fault that indicates the process variation of the main PID controller has a high value.	■ Parameter P1030 is programmed for 2 and the value of the process variation of the main PID controller remained above the value programmed in P1033 for the time programmed in P1034.
F0767 Dry Pump Detected	Fault that indicates the dry pump condition was detected for the pump driven by the CFW500 frequency inverter.	■ Parameter P1042 is programmed for 2 and the pump driven by the CFW500 frequency inverter is running with speed above the speed programmed in P1043 and the motor torque remained below the value programmed in P1044 for the time programmed in P1045.
F0769 Broken Belt Detected	Fault that indicates the broken belt condition was detected for the motor driven by the CFW500 frequency inverter.	■ Parameter P1046 is programmed for 2 and the motor driven by the CFW500 frequency inverter is running with speed above the speed programmed in P1047 and the motor torque remained below the value programmed in P1048 for the time programmed in P1049.
F0771 Filter Maintenance	Fault that indicates the need of replacing the system filter.	■ Parameter P1050 is programmed for 2 and the operation time of the motor driven by the CFW500 frequency inverter shown in P1052 is above the value programmed in P1051.
F0773 HVAC Plug-in Module not Detected	Indicates to the user that the plug-in module HVAC was not detected.	■ Plug-in Module installed does not match the plug-in module for specific function HVAC.
F0787 Low Level of the Process Variable of the External PID Controller	Fault that indicates the feedback of the external PID controller has a low value.	■ Parameter P1075 is programmed for 2 and the value of the process variation of the external PID controller remained below the value programmed in P1076 for the time programmed in P1077.
F0789 High Level of the Process Variable of the External PID Controller	Fault that indicates the feedback of the external PID controller has a high value.	■ Parameter P1075 is programmed for 2 and the value of the process variation of the external PID controller remained above the value programmed in P1078 for the time programmed in P1079.

Table 0.1: *Situations for CONFIG status*

P0047	Origin Situation of CONFIG Status
0	Out of CONFIG status, HMI, P0006 and P0680 must not indicate CONF
1	Two or more DIx (P0263...P0270) programmed for Forward Run (4)
2	Two or more DIx (P0263...P0270) programmed for Reverse Run (5)
3	Two or more DIx (P0263...P0270) programmed for Start (6)
4	Two or more DIx (P0263...P0270) programmed for Stop (7)
5	Two or more DIx (P0263...P0270) set to Direction or Rotation (8). DI set to direction of rotation with Forward Run (4) or Reverse Run (5) DI, simultaneously
6	Two or more DIx (P0263...P0270) programmed for LOC/REM (9)
7	Two or more DIx (P0263...P0270) programmed for Accelerate E.P. (11)
8	Two or more DIx (P0263...P0270) programmed for Decelerate E.P. (12)
9	Two or more DIx (P0263...P0270) programmed for 2nd Ramp (14)
10	Two or more DIx (P0263...P0270) programmed for PID Man./Auto (22)
11	Two or more DIx (P0263...P0270) programmed for Disable Flying Start (24)
12	Two or more DIx (P0263...P0270) programmed for Lock Programming (26)
13	Two or more DIx (P0263...P0270) programmed for Load User 1 (27)
14	Two or more DIx (P0263...P0270) programmed for Load User 2 (28)
15	DIx (P0263...P0270) programmed for Forward Run (4) without DIx (P0263...P0270) programmed for Reverse Run (5) or the opposite
16	DIx (P0263...P0270) programmed for Start (6) without DIx (P0263...P0270) programmed for Stop (7) or the opposite
17	Reference (P0221 or P0222) programmed for Multispeed (8) without DIx (P0263...P0270) programmed for Multispeed (13) or the opposite
18	Reference (P0221 or P0222) programmed for Electronic Potentiometer (7) without DIx (P0263...P0270) programmed for 11 = Accelerate E.P or the opposite
19	Run/Stop command (P0224 or P0227) programmed for DIx (1) without DIx (P0263...P0270) programmed for (1 = Run/Stop) and without DIx (P0263...P0270) programmed for General Enable (2) and without DIx (P0263...P0270) programmed for Quick Stop (3) and without DIx (P0263...P0270) programmed for Forward Run (4) and without DIx (P0263...P0270) programmed for Start (6)
20	Digital input DI2 (P0265) programmed for PTC (29) or analog input AI3 (P0241) programmed for PTC (4)
21	P0203 programmed for PID via AI1 (1) and reference (P0221 or P0222) programmed for AI1 (1)
22	P0203 programmed for PID via AI3 (2) and reference (P0221 or P0222) programmed for AI3 (3)
23	P0203 programmed for PID via FI (3) and reference (P0221 or P0222) programmed for FI (4)
24	P0203 programmed for PID via AI3 (2) and the plug-in module has no AI3
25	Reference (P0221 or P0222) programmed for AI2 (2) or AI3 (3) and the plug-in module has no AI2 and AI3
26	P0312 programmed for Remote HMI (0 or 6) without HMI connected
27	Poor configuration of the V/f curve (P0142 to P0147 causes voltage step in the output)
28	Bypass mode configured (P0583) without any digital input configured for "Activate bypass" Bypass mode configured with more than one digital input configured for "Activate bypass" Bypass mode configured without a digital output configured for "Contactor bypass drive" and a digital output configure for "Mains bypass contactor" Bypass mode configured and either of the two bypass digital outputs with duplicated configuration
29	"Fire Mode" configured without a digital input configured for "Activate Fire Mode" More than one digital input configured for "Activate Fire Mode" More than one digital output configured for "Fire Mode active" Digital input configured for "Fire Mode" with the "Fire Mode" function disabled Digital input configured for "Fire Mode Active" with the "Fire Mode" function disabled
30	Oriented start-up is active
31	Vector control is active with one of the motor parameters (P0409, P0410, P0411, P0412, or P0413) in zero
32	Two or more DIx programmed for Multispeed MS2 (DI1, DI2, DI5 and DI6) or MS1 (DI3 and DI7) or MS0 (DI4 and DI8)
34	FlyingStart has not been implemented for VVW PM control
35	Ride-Through has not been implemented for VVW PM control
36	Energy Saving has not been implemented for VVW PM control
37	VVW PM control is not available on Frame A inverters
38	Number of motor poles set with an odd number or zero

1 SAFETY INSTRUCTIONS

This manual contains the information necessary for the correct setting of the frequency inverter CFW500.

It was developed to be used by people with proper technical training or qualification to operate this kind of equipment. These people must follow the safety instructions defined by local standards. The noncompliance with the safety instructions may result in death risk and/or equipment damage.

1.1 SAFETY WARNINGS IN THIS MANUAL

DANGER!
The procedures recommended in this warning have the purpose of protecting the user against death, serious injuries and considerable material damage.

ATTENTION!
The procedures recommended in this warning have the purpose of avoiding material damage.

NOTE!
The information mentioned in this warning is important for the proper understanding and good operation of the product.

1.2 SAFETY WARNINGS IN THE PRODUCT

The following symbols are fixed to the product, as a safety warning:

High voltages present.

Components sensitive to electrostatic discharge.
Do not touch them.

Mandatory connection to the protective earth (PE).

Connection of the shield to the ground.

Hot surface.

1.3 PRELIMINARY RECOMMENDATIONS

DANGER!
Only qualified personnel, familiar with the CFW500 inverter and related equipment must plan or perform the installation, start-up, operation and maintenance of this equipment.
The personnel must follow the safety instructions described in this manual and/or defined by local standards.
The noncompliance with the safety instructions may result in death risk and/or equipment damage.

NOTE!
For the purposes of this manual, qualified personnel are those trained in order to be able to:
1. Install, ground, power up and operate the CFW500 in accordance with this manual and the safety legal procedures in force.
2. Use the protective equipment in accordance with the relevant standards.
3. Give first aid.

DANGER!
Always disconnect the general power supply before touching any electric component associated to the inverter.
Many components may remain loaded with high voltages and/or moving (fans), even after the AC power supply input is disconnected or turned off. Wait for at least ten minutes in order to guarantee the full discharge of the capacitors. Always connect the frame of the equipment to the protective earth (PE) at the proper point for that.

ATTENTION!
Electronic boards have components sensitive to electrostatic discharge. Do not touch directly the component parts or connectors. If necessary, first touch the grounded metallic frame or use proper grounding strap.

Do not execute any applied potential test on the inverter!
If necessary, contact WEG.

NOTE!
Frequency inverters may interfere in other electronic equipments. Observe the recommendations of chapter 3 Installation and Connection of the CFW500 user's manual in order to minimize these effects.
Read the CFW500 user's manual, available for download on the website: **www.weg.net**, completely before installing or operating this inverter.

2 GENERAL INFORMATION

2.1 ABOUT THE MANUAL

This manual presents information necessary for the configuration of all the functions and parameters of the frequency inverter CFW500. This manual must be used together with the user's manual of the CFW500.

The text provides additional information so as simplify the use and programming of the CFW500 in certain applications.

2.2 TERMINOLOGY AND DEFINITIONS

2.2.1 Terms and Definitions Used

I_{nom}: inverter rated current by P0295.

Overload Duty: in the CFW500 there is no difference in the operating duty between "Light - Normal Duty" (ND) and "Heavy - Heavy Duty" (HD). Thus, the overload duty adopted for the CFW500 is equivalent to the HD standard, that is, the maximum overload current is 1.5 x I_{nom} for one minute of continuous operation.

Rectifier: input circuit of the inverters that transforms the input AC voltage into DC. It is formed by high-power diodes.

IGBT: insulated gate bipolar transistor - basic component part of the output inverter bridge. It works as an electronic switch in the saturated (closed switch) and cut-off (open switch) modes.

DC Link: intermediary circuit of the inverter; voltage in direct current obtained by rectifying the power supply alternate voltage or external supply; it supplies the output inverter bridge with IGBTs.

Pre-Charge Circuit: charges the capacitors of the DC Link with limited current, avoiding current peaks in the inverter power-up.

Braking IGBT: it works as a switch to turn on the braking resistor. It is controlled by the DC Link level.

PTC: resistor whose resistance value in ohms increases proportionally to the temperature; it is used as a temperature sensor in motors.

NTC: resistor whose resistance value in ohms decreases proportionally to the increase of the temperature; it is used as a temperature sensor in power packs.

HMI: human-machine interface; device which allows controlling the motor, viewing and changing the inverter parameters. It features keys to control the motor, navigation keys and graphic LCD display.

PE: protective earth.

PWM: pulse width modulation - modulation by pulse width; pulsed voltage that supplies the motor.

Switching Frequency: switching frequency of the IGBTs of the inverter bridge, normally expressed in kHz.

Nsync: motor synchronous speed in revolutions per minute.

General Enable: when activated, it accelerates the motor by acceleration ramp and Run/Stop = Run. When disabled, the PWM pulses will be immediately blocked. It may be controlled by digital input set for this function or via serial.

Run/Stop: inverter function which, when activated (run), accelerates the motor by acceleration ramp up to the reference speed and, when deactivated (stop), decelerates the motor by deceleration ramp. It may be controlled by digital input set for this function or via serial.

Heatsink: metal part designed to dissipate the heat produced by power semiconductors.

Amp, A: ampere.

°C: celsius degrees.

°F: fahrenheit degree.

CA: alternate current.

DC: direct current.

CV: cavalo-vapor = 736 Watts (Brazilian unit of measurement of power, normally used to indicate mechanical power of electric motors).

hp: horse power = 746 Watts (unit of measurement of power, normally used to indicate mechanical power of electric motors).

Fmin: minimum frequency or speed (P0133).

Fmax: maximum frequency or speed (P0134).

DIx: digital input "x".

AIx: analog input "x".

AOx: analog output "x".

DOx: digital output "x".

Io: output current.

Iu: current on phase u (RMS).

Iv: current on phase v (RMS).

Iw: current on phase w (RMS).

Ia: output active current (RMS).

Hz: hertz.

kHz: kilohertz = 1000 hertz.

mA: milliampere = 0.001 ampere.

min: minute.

ms: millisecond = 0.001 seconds.

Nm: newton meter; unit of torque.

rms: root mean square; effective value.

rpm: revolutions per minute; unit of measurement of rotation.

s: second.

V: volts.

Ω: ohms.

CO/DN/PB/Eth: CANopen, DeviceNet, Profibus DP or EtherNet Interface.

2.2.2 Numerical Representation

The decimal numbers are represented by means of digits without suffix. Hexadecimal numbers are represented with the letter "h" after the number.

2.2.3 Symbols to Describe Parameter Properties

ro	Read only parameter.
cfg	Parameter that can be changed only with a stopped motor.
V/f	Parameter visible on the HMI only in the V/f mode: P0202 = 0.
VVW	Parameter visible on the HMI only in the VVW mode: P0202 = 5.
VVW PM	Parameter visible on the HMI only in the VVW PM mode: P0202 = 8.
Vector	Parameter visible HMI only in the vector mode: P0202 = 3 or 4.
Sless	Parameter visible on the HMI only in the sensorless mode: P0202 = 3.
Enc	Parameter visible on the HMI only in the vector with encoder mode: P0202 = 4.

3 ABOUT THE CFW500

The CFW500 frequency inverter is a high-performance product which allows speed and torque control of three-phase induction motors and permanent magnet motors. This product offers up to five options to control the motor: V/f scalar control, VVW control, vector control with sensor and sensorless vector control for induction motors and VVW PM control for permanent magnet motors.

In the vector control, the operation is optimized for the used motor, providing a better performance in terms of speed and torque control. The "Self-Tuning" function, available for the vector control, allows the automatic setting of control parameters and controllers based on the identification of the motor parameters.

The VVW control (Voltage Vector WEG) has a performance and precision between the V/f scalar control and the vector control; on the other hand, it adds robustness and simplicity to drive motors without speed sensors. The self-tuning function is also available in the VVW control.

The scalar control (V/f) is recommended for simpler applications, such as the activation of most pumps and fans. In those cases, it is possible to reduce the motor losses by adjusting the V/f curve through the parameters by approximation of quadratic curve of the V/f relationship, which results in energy saving. The V/f mode is used when more than a motor is activated by an inverter simultaneously (multi-motor applications). In addition, the EOC energy saving function can be activated in this type of control, making the CFW500 minimize the power spent on the motor. Depending on the operation region, this reduction may be quite significant when applied to quadratic loads and with speed and torque variation.

The VVW PM (Voltage Vector WEG for PM) control for permanent magnet motors is recommended for simple applications with slow dynamics, such as pump, fan and compressor drives. In this control, it is possible to reduce losses by adjusting the "Maximum Torque per Amp" (MPTA) control. This setting can be significant to increase the power factor or performance of PM motors for load and/or speed variations.

The frequency inverter CFW500 also has PLC functions (Programmable Logic Controller) through the SoftPLC (integrated) feature. For further details regarding the programming of those functions on the CFW500, refer to the SoftPLC manual of the CFW500.

The main components of the CFW500 can be viewed in the block diagram of Figure 3.1 on page 3-2 and Figure 3.2 on page 3-3. The mechanical project was designed to simplify the connection and maintenance, as well as to ensure the safety of the product.

Developed to meet the main technological requirements of the market, the CFW500 has a plug-in modular interface which adapts to the application. As shown in item 4 of Figure 3.2 on page 3-3, the plug-in module allows the CFW500 meeting the requirements of simple applications, as well as applications with high-performance interfaces.

All CFW500 interface models feature communication in physical media RS-485 with Modbus RTU and resources for data transfer via memory card.

The CFW500 supports protocols on communication networks Modbus RTU, CANopen, DeviceNet, Profibus-DP and EtherNet.

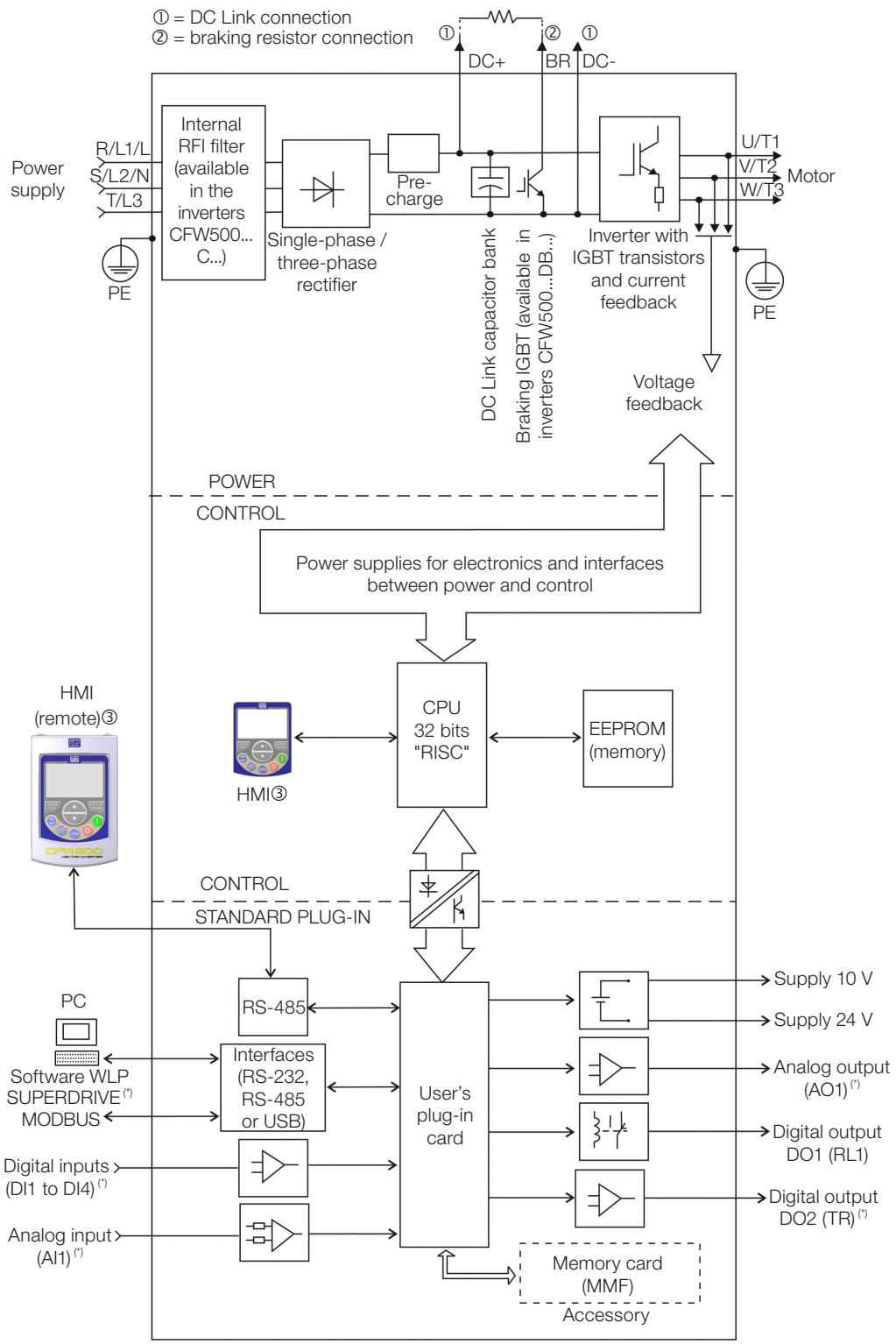

(*) The number of analog and digital inputs and outputs, may vary according to the plug-in used. For further information, refer to the installation, configuration and operation guide of the accessory with plug-in module used.

Figure 3.1: *CFW500 block diagram*

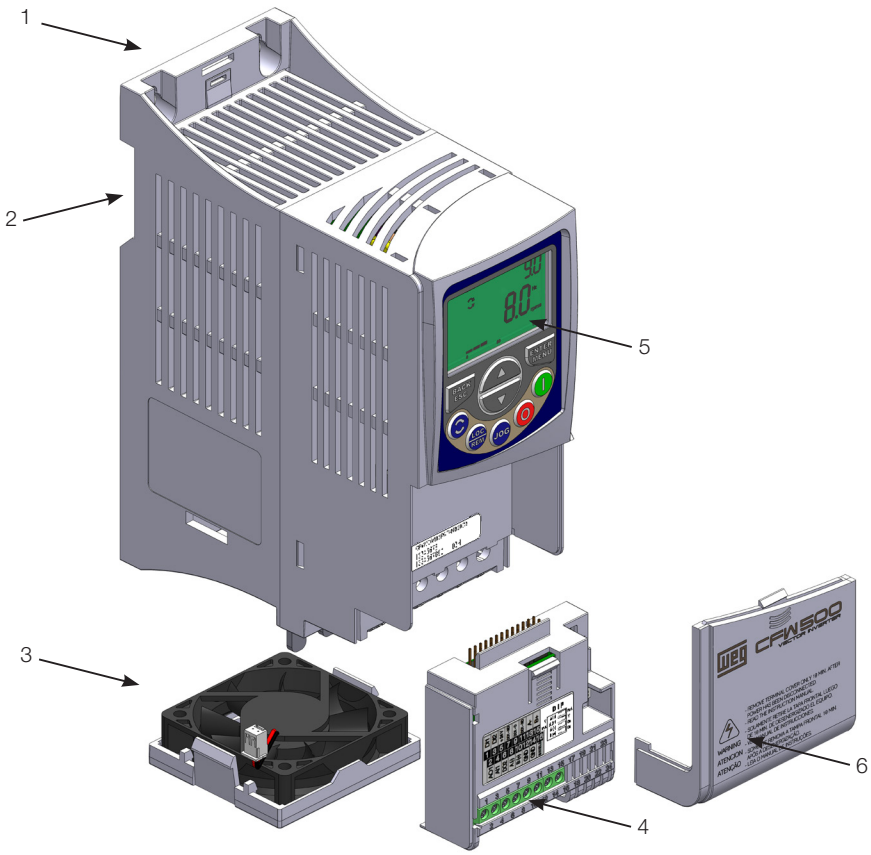

1 – fixing support (for surface mounting)
2 – fixing support (for Din-rail mount)
3 – fan with fixing support
4 – plug-in module
5 – HMI
6 – front cover

Figure 3.2: *Main components of the CFW500*

4 HMI AND BASIC PROGRAMMING

4.1 USE OF THE HMI TO OPERATE THE INVERTER

Through the HMI, it is possible to view and set all the parameters. The HMI features two operating modes: monitoring and parameterization. The functions of the keys and the active fields on the HMI display vary according to the operating mode. The setting mode is composed of three levels.

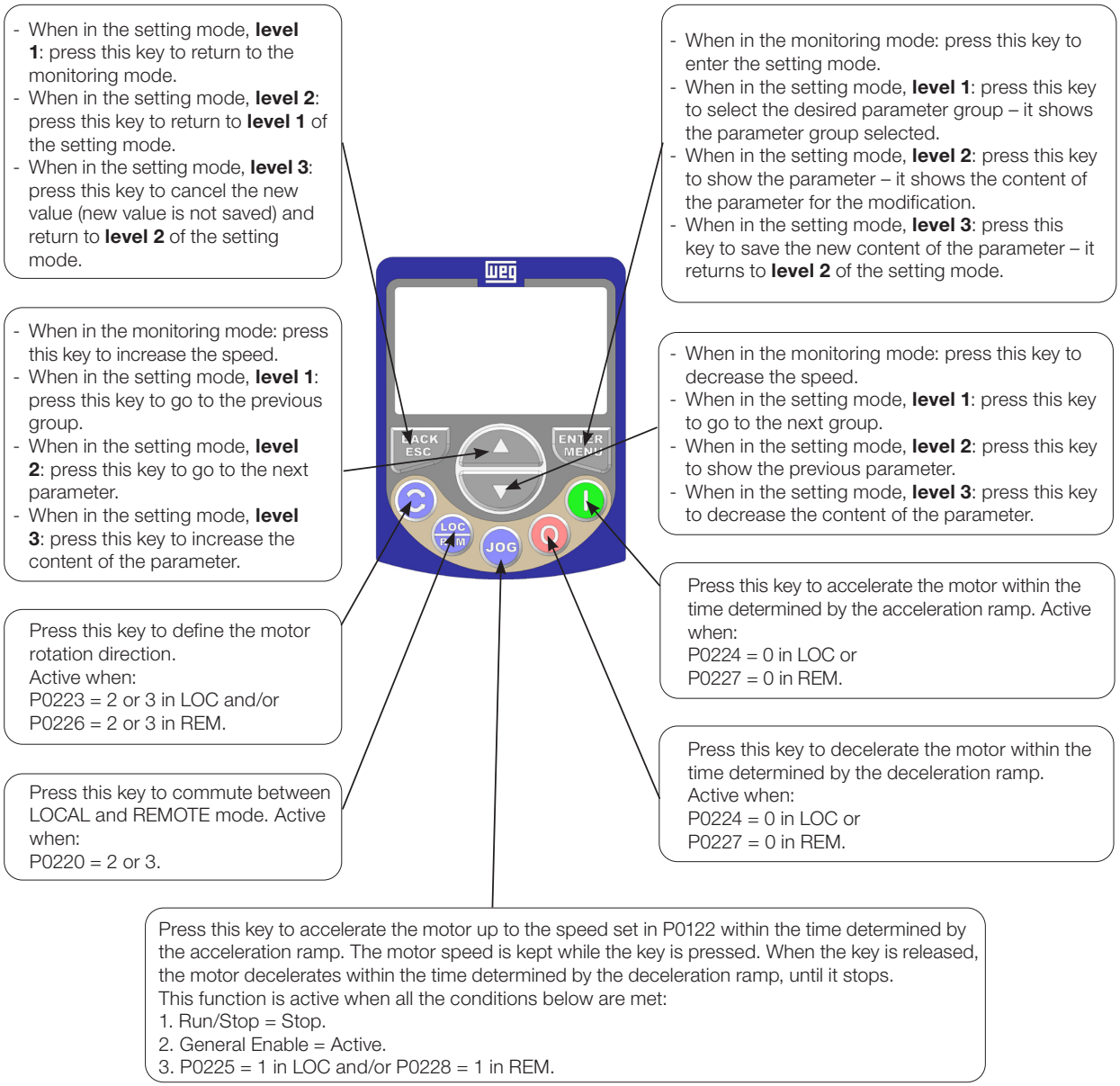

Figure 4.1: *HMI keys*

4.2 INDICATIONS ON THE HMI DISPLAY

The information shown on the HMI LCD display are divided into six fields: menu, status, secondary display, unit, main display and bar graph. Those fields are defined in Figure 4.2 on page 4-2. The main and secondary displays allow alternating the focus to scroll the parameter number or parameter value according to levels 2 and 3 of the parameterization mode, respectively.

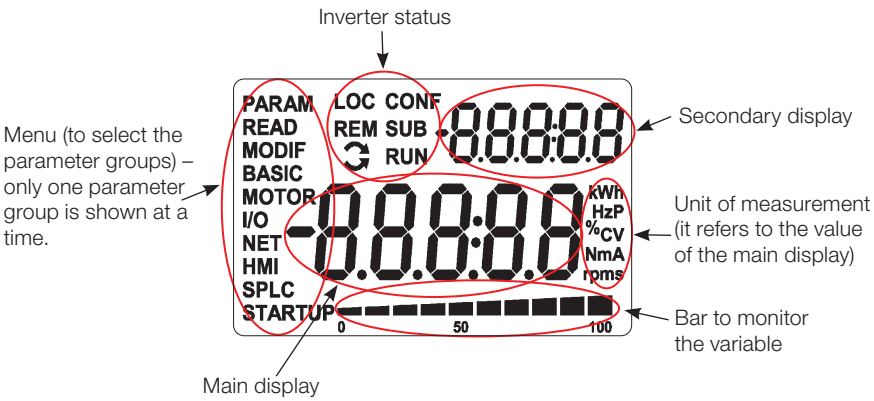

Figure 4.2: *Display areas*

4

Parameter groups available in the field Menu:

- **PARAM:** all parameters.
- **READ:** read only parameters.
- **MODIF:** parameters modified in relation to the factory default.
- **BASIC:** parameters for basic application.
- **MOTOR:** parameters related to the motor control.
- **I/O:** parameters related to digital and analog inputs and outputs.
- **NET:** parameters related to the communication networks.
- **HMI:** parameters to configure the HMI.
- **SPLC:** parameters related to the SoftPLC.
- **STARTUP:** parameters for oriented Start-up.

Status of the inverter:

- **LOC:** command source or Local references.
- **REM:** command source or Remote references.
- ↻ **:** direction of rotation by means of arrows.
- **CONF:** CONFIG status active.
- **SUB:** undervoltage.
- **RUN:** execution.

4.3 OPERATING MODES OF THE HMI

The monitoring mode allows the user to view up to three variables on the main display, secondary display and bar graph. Such fields of the display are defined in Figure 4.2 on page 4-2.

The setting mode is composed of three levels:

Level 1 allows the user to select the menu items to direct the browsing of the parameters.

Level 2 allows browsing the parameters of the group selected by **level 1**.

Level 3, in turn, allows the modification of the parameter selected in **level 2**. At the end of this level, the modified value is saved or not if the key ENTER or ESC is pressed, respectively.

The Figure 4.3 on page 4-3 illustrates the basic browsing of the operating modes of the HMI.

Monitoring Mode

- It is the initial status of the HMI after the powering up and of the initialization screen, with factory default values
- The field menu is not active in this mode
- The fields main display, secondary display of the HMI and monitoring bar indicate the values of three parameters predefined by P0205, P0206 and P0207
- From the monitoring mode, when you press the **ENTER/MENU** key, you commute to the setting mode

Setting Mode

Level 1:

- This is the first level of the setting mode. It is possible to choose the parameter group using the keys ▲ and ▼
- The fields: main display, secondary display, bar graph for monitoring of variable and measurement units are not shown in this level
- Press the **ENTER/MENU** key to go to level 2 of the setting mode – parameter selection
- Press the **BACK/ESC** key to return to the monitoring mode

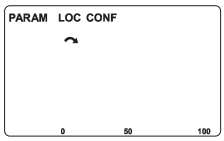

Level 2:

- The number of the parameter is shown on the main display and its content on the secondary display
- Use the ▲ and ▼ keys to find the desired parameter
- Press the **ENTER/MENU** key to go to level 3 of the setting mode – modification of the parameter content
- Press the **BACK/ESC** key to return to level 1 of the setting mode

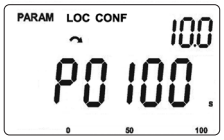

Level 3:

- The content of the parameter is shown on the main display and the number of the parameter is shown on the secondary display
- Use the ▲ and ▼ keys to configure the new value for the selected parameter
- Press the **ENTER/MENU** key to confirm the modification (save the new value) or **BACK/ESC** to cancel the modification (not save the new value). In both cases, the HMI returns to level 2 of the setting mode

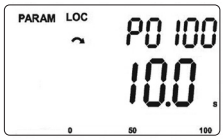

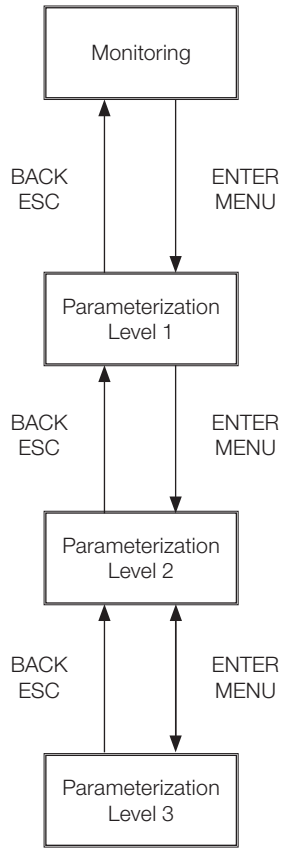

Figure 4.3: *HMI operating modes*

NOTE!
When the inverter is in the Fault state, the main display indicates the number of the fault in the format **Fxxxx**. The browsing is allowed after pressing the ESC key, and the indication **Fxxxx** goes to the secondary display until the fault is reset.

NOTE!
When the inverter is in the Alarm state, the main display indicates the number of the alarm in the format **Axxxx**. The browsing is allowed after pressing any key, and the indication **Axxxx** goes to the secondary display until the situation causing the alarm is solved.

5 PROGRAMMING BASIC INSTRUCTIONS

5.1 PARAMETER STRUCTURE

Aiming at simplifying the parameterization process, the CFW500 parameters were classified into ten groups which can be individually selected in the Menu area of the HMI display. When the enter/menu key of the HMI is pressed in the monitoring mode, you enter the setting mode level 1. In this mode, it is possible to select the desired parameter group by browsing with the "▲" and "▼" keys. For further details on the use of the HMI, refer to Chapter 4 HMI AND BASIC PROGRAMMING on page 4-1.

NOTE!
The inverter comes from the factory with the frequency (V/f 50/60 Hz mode) and voltage adjusted according to the market.
The reset to factory default may change the content of the parameters related to frequency as per P0204. In the detailed description, some parameters have values between brackets, which represents the default value for operation in 50 Hz; thus the value without brackets is the default for operation in 60 Hz.

5.2 PARAMETERS SELECTED BY THE HMI MENU

In the first level of the setting mode, select the group to browse the next levels according to the table below.

Table 5.1: *Parameter group accessed by the HMI MENU*

Group	Contained Parameters
PARAM	**All parameters**
READ	**Read only parameters:** P0001, P0002, P0003, P0004, P0005, P0006, P0007, P0009, P0011, P0012, P0013, P0014, P0015, P0016, P0017, P0018, P0019, P0020, P0021, P0022, P0023, P0024, P0027, P0029, P0030, P0037, P0040, P0041, P0047, P0048, P0049, P0050, P0051, P0052, P0053, P0054, P0055, P0060, P0061, P0062, P0063, P0064, P0065, P0070, P0071, P0072, P0073, P0074, P0075, P0295, P0296, P0316, P0680, P0681, P0682, P0683, P0685, P0690, P0695, P0696, P0697, P0698, P0705, P0706, P0707, P0708, P0709, P0719, P0720, P0721, P0722, P1000, P1002
MODIF	**Only parameters whose contents are different from the factory settings**
BASIC	**Parameters for simple application: ramps, minimum and maximum speed, maximum current and torque boost:** P0100, P0101, P0133, P0134, P0135 and P0136
MOTOR	**Parameter related to the motor data control** P0135, P0136, P0137, P0138, P0150, P0182, P0183, P0184, P0398, P0400, P0401, P0402, P0403, P0404, P0406, P0409, P0410, P0411, P0412, P0413, P0445, P0446, P0447, P0448, P0451, P0452, P0453, P0454
I/O	**Groups related to digital and analog inputs and outputs:** P0012, P0013, P0014, P0015, P0016, P0017, P0018, P0019, P0020, P0021, P0022, P0105, P0220, P0221, P0222, P0223, P0224, P0225, P0226, P0227, P0228, P0229, P0230, P0231, P0232, P0233, P0234, P0235, P0236, P0237, P0238, P0239, P0240, P0241, P0242, P0243, P0244, P0245, P0246, P0247, P0248, P0249, P0250, P0251, P0252, P0253, P0254, P0255, P0256, P0257, P0258, P0259, P0260, P0263, P0264, P0265, P0266, P0267, P0268, P0269, P0270, P0271, P0275, P0276, P0277, P0278, P0279, P0287, P0288, P0290, P0293, P0533, P0535
NET	**Parameter related to the communication networks:** P0308, P0310, P0311, P0312, P0313, P0314, P0316, P0680, P0681, P0682, P0683, P0684, P0685, P0690, P0695, P0696, P0697, P0698, P0700, P0701, P0702, P0703, P0705, P0706, P0707, P0708, P0709, P0710, P0711, P0712, P0713, P0714, P0715, P0716, P0717, P0718, P0719, P0720, P0721, P0722, P0740...P0968
HMI	**Parameter to configure the HMI:** P0200, P0205, P0206, P0207, P0208, P0209, P0210, P0213, P0216, P0528, P0529
SPLC	**Parameter related to the SoftPLC function:** P1000, P1001, P1002, P1010..P1059
STARTUP	**Parameter to enter the VVW - Oriented Start-up mode:** P0202, P0296, P0398, P0400, P0401, P0403, P0402 , P0404, P0406, P0407, P0408, P0409, P0410, P0411, P0412, P0413, P0431, P0435

NOTE!
Besides the selected group in the menu field of the HMI, the view of the parameters on the HMI depends on the hardware installed and on the operating mode of the CFW500. Therefore, observe the connected plug-in module, as well as the motor control mode: VVW or V/f. For example, if the plug-in module only features the analog input AI1, the parameters related to the other analog inputs are not shown. The same occurs with the parameters exclusively related to the VVW and V/f modes.

5.3 HMI

In the HMI group, you find parameters related to the showing of information on the display, backlight and password of the HMI. See detailed description below of the possible settings of the parameters.

P0000 – Access to the Parameters

Adjustable Range:	0 to 9999	**Factory Setting:**	0
Properties:			
Access Groups via HMI:			

5

Description:

Password input to release the access to the parameters. Once a password is saved in P0200, the access to the parameters is only allowed if this password is set in P0000.

After setting P0000 with a password value, P0000 will show "1" or "0", keeping the set password value hidden. Where "1" releases the access to parameters and "0" locks the access to the parameters.

NOTE!
The access to the parameters and P0000 is cleared together with the powering down of the inverter.

P0200 – Password

Adjustable Range:	0 = Inactive 1 = Active 1 to 9999 = New Password	**Factory Setting:**	0
Properties:			
Access Groups via HMI:	HMI		

Description:

It allows activating the password (by inserting a new value) or disabling it. For further details regarding the use of this parameter, refer to Table 5.2 on page 5-2.

Table 5.2: *Required procedure for each kind of action*

Action	Procedure
Activate password	1. Set P0200 with the desired value for the password (P0200 = password) 2. After this procedure, the new password is active and P0200 is automatically adjusted for 1 (password active) (1)
Change password	1. Set the current value of the password (P0000 = password) 2. Set the desired value for the new password in P0200 (P0200 = new password) 3. After this procedure, the new password is active and P0200 is automatically adjusted for 1 (password active) (1)
Disable password	1. Set the current value of the password (P0000 = password) 2. Set inactive password (P0200 = 0) 3. After this procedure, the password is disabled (2)
Disable password	1. Activate a factory default by means of P0204 2. After this procedure, the password is disabled (2)

Notes:
(1) It only allows changing the content of the parameters when P0000 is equal to the value of the password.
(2) It is allowed to change the content of the parameters and P0000 is inaccessible.

P0205 – Main Display Parameter Selection

P0206 – Secondary Display Parameter Selection

P0207 – Bar Graph Parameter Selection

Adjustable Range:	0 to 1500	**Factory Setting:**	P0205 = 2 P0206 = 1 P0207 = 3
Properties:			
Access Groups via HMI:	HMI		

Description:

These parameters define which parameters are shown on the HMI display in the monitoring mode. More details of this programming can be found in Section 5.5 SETTING OF DISPLAY INDICATIONS IN THE MONITORING MODE on page 5-6.

P0208 – Scale of Reference

Adjustable Range:	1 to 65535	**Factory Setting:**	600 (500)
Properties:			
Access Groups via HMI:	HMI		

Description:

This parameter allows adjusting the scale of the parameters speed reference P0001 and output (motor) speed P0002 for the motor rated frequency point given by P0403. Thus, you can adjust the indication of P0001 and P0002 for any scale, such as the output frequency (Hz), motor speed (rpm) or a percentage value (%), for instance.

Together with the unit in P0209 and the decimal places in P0210, the rated reference (P0208) defines the speed indication on the inverter HMI. According to the factory default of those parameters, the preset scale on the inverter is in "Hz" and with a decimal place (60.0 Hz or 50.0 Hz). On the other hand, by setting P0208 = 1800 or 1500, P0209 = 3 and P0210 = 0, a scale in "rpm" with no decimal places is defined (1800 rpm or 1500 rpm).

P0209 – Reference Engineering Unit

Adjustable Range:	0 = Without Unit 1 = V 2 = A 3 = rpm 4 = s 5 = ms 6 = N 7 = m 8 = Nm 9 = mA 10 = % 11 = °C 12 = CV 13 = Hz 14 = HP 15 = h 16 = W 17 = kW 18 = kWh 19 = H	**Factory Setting:**	13
Properties:			
Access Groups via HMI:	HMI		

Description:

This parameter selects the engineering unit that will be presented on parameters P0001 and P0002.

P0210 – Reference Indication Form

Adjustable Range:	0 = wxyz 1 = wxy.z 2 = wx.yz 3 = w.xyz	**Factory Setting:**	1
Properties:			
Access Groups via HMI:	HMI		

Description:

This parameter allows setting the form of indication of parameters P0001 and P0002.

P0213 – Bar Graph Scale Factor

Adjustable Range:	1 to 65535	**Factory Setting:**	According to the inverter model
Properties:			
Access Groups via HMI:	HMI		

Description:

This parameter configures the full scale (100 %) of the bar graph to indicate the parameter selected by P0207.

NOTE!
The bar graph normally indicates the value defined by P0207 and P0210; however, in some special situations, such as parameter loading, data transfer and self-tuning, the function of the bar graph is changed in order to show the progress of those operations.

P0216 – HMI Display Backlight

Adjustable Range:	0 = OFF 1 = ON	**Factory Setting:**	1
Properties:	cfg		
Access Groups via HMI:	HMI		

Description:

The function of this parameter is to turn on or off the backlight of the HMI display.

NOTE!
When the remote HMI is connected and activated by P0312, the backlight of the CFW500 local HMI is cut off and parameter P0216 starts to control the remote HMI.

5

5.4 BACKUP PARAMETERS

The CFW500 BACKUP functions allow saving the inverter current parameter contents in a specific memory (EEPROM) or overwrite the current parameters with the content of the specified memory.

P0204 – Load / Save Parameters

Adjustable Range:	0 to 4 = Not Used 5 = Load WEG 60 Hz 6 = Load WEG 50 Hz 7 = Load User 1 8 = Load User 2 9 = Save User 1 10 = Save User 2 11 = Load Default SoftPLC 12 to 15 = Reserved	**Factory Setting:**	0
Properties:	cfg		
Access Groups via HMI:			

Description:

It allows saving the inverter present parameters in a non-volatile memory (EEPROM) of the control module or the opposite, loading the parameters with the content of this area. Table 5.3 on page 5-6 describes the actions performed by each option.

Table 5.3: Option of parameter P0204

P0204	Action
0 to 4	**No Function:** no action
5	**Load WEG 60 Hz:** it loads the default parameters on the inverter with the factory default for 60 Hz
6	**Load WEG 50 Hz:** it loads the default parameters on the inverter with the factory default for 50 Hz
7	**Load User 1:** it transfers the content of the memory of parameters 1 to the inverter current parameters
8	**Load User 2:** it transfers the content of the memory of parameters 2 to the inverter current parameters
9	**Saver User 1:** it transfers the current content of the parameters to the memory of parameters 1
10	**Saver User 2:** it transfers the current content of the parameters to the memory of parameters 2
11	**Load Default SoftPLC:** it loads the factory default in SoftPLC parameters (P1010 to P1059)
12 to 15	Reserved

In order to load the parameters of user 1 and/or user 2 to the CFW500 operating area (P0204 = 7 or 8), it is necessary that those areas be previously saved.

The operation of loading one of those memories (P0204 = 7 or 8) can also be done via digital inputs (DIx). For further details referring to this programming, refer to Section 14.5 DIGITAL INPUTS on page 14-14.

NOTE!
When P0204 = 5 or 6, parameters P0296 (Rated voltage), P0297 (Switching frequency) and P0308 (Serial address) are not changed to the factory default.

P0317 - Oriented Start-up

Adjustable Range:	0 = No 1 = Yes	**Factory Setting:**	0
Properties:	cfg		
Access Groups via HMI:	STARTUP		

Description:

When this parameter is changed to "1", the Oriented Start-up routine starts. The CFW500 goes into the "CONF" state, which is indicated on the HMI. Within the Oriented Start-up, the user has access to important configuration parameters of the CFW500 and of the motor for the control type to be used in the application. For further information on the use of this parameter, refer to the following sections:

Section 9.2 START-UP IN V/f MODE on page 9-7.

Section 10.2 START-UP IN VVW MODE on page 10-6.

Section 11.3 PARAMETERS FOR SETTING THE VVW PM CONTROL on page 11-6.

Section 12.8 START-UP IN THE VECTOR MODES SENSORLESS AND WITH ENCODER on page 12-27.

5.5 SETTING OF DISPLAY INDICATIONS IN THE MONITORING MODE

Whenever the inverter is powered up, the HMI display goes to the monitoring mode. In order to simplify the reading of the inverter parameters, the display was designed to show three parameters simultaneously, at the user's discretion. Two of those parameters (main display and secondary display) are shown as numbers and the other parameter as a bar graph. The selection of those parameters is done via P0205, P0206 and P0207, as indicated in Figure 5.1 on page 5-7.

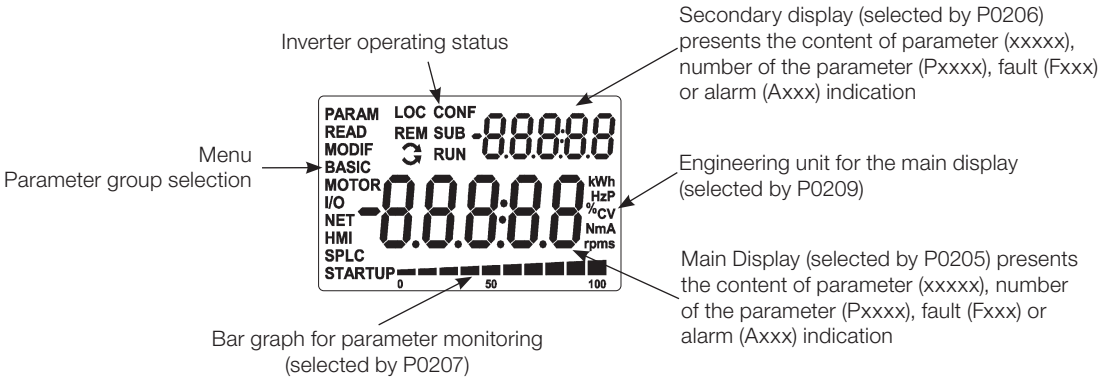

Figure 5.1: *Screen on initialization and display fields*

5.6 SITUATIONS FOR CONFIG STATUS

The CONFIG status is indicated by the HMI "CONF" status, as well as in parameters P0006 and P0680. Such status indicates that the CFW500 cannot enable the output PWM pulses because the inverter configuration is incorrect or incomplete.

The Table 0.1 on page 0-25 shows the situations of CONFIG status, where the user can identify the origin condition through parameter P0047.

5.7 SOFTPLC ENGINEERING UNITS

This parameter group allows the user to configure the engineering unit for indication on the HMI of the user's parameters of the SoftPLC module.

P0510 – SoftPLC Engineering Unit 1

Adjustable Range:	0 = None 1 = V 2 = A 3 = rpm 4 = s 5 = ms 6 = N 7 = m 8 = Nm 9 = mA 10 = % 11 = °C 12 = CV 13 = Hz 14 = HP 15 = h 16 = W 17 = kW 18 = kWh 19 = H	**Factory Setting:**	0
Properties:			
Access Groups via HMI:	HMI, SPLC		

Description:

This parameter selects the engineering unit that will be viewed on the HMI, that is, any SoftPLC user's parameter which is associated to engineering unit 1 will be viewed in this format.

P0511 – Decimal Point SoftPLC Engineering Unit 1

Adjustable Range:	0 = wxyz 1 = wxy.z 2 = wx.yz 3 = w.xyz	**Factory Setting:**	1
Properties:			
Access Groups via HMI:	HMI, SPLC		

Description:

This parameter selects decimal point that will be viewed on the HMI, that is, any SoftPLC user's parameter which is associated to engineering unit 1 will be viewed in this format.

P0512 – SoftPLC Engineering Unit 2

Adjustable Range:	0 = None 1 = V 2 = A 3 = rpm 4 = s 5 = ms 6 = N 7 = m 8 = Nm 9 = mA 10 = % 11 = °C 12 = CV 13 = Hz 14 = HP 15 = h 16 = W 17 = kW 18 = kWh 19 = H	**Factory Setting:**	3
Properties:			
Access Groups via HMI:	HMI, SPLC		

Description:

This parameter selects the engineering unit that will be viewed on the HMI, that is, any SoftPLC user's parameter which is associated to engineering unit 2 will be viewed in this format.

P0513 – Decimal Point SoftPLC Engineering Unit 2

Adjustable Range:	0 = wxyz 1 = wxy.z 2 = wx.yz 3 = w.xyz	**Factory Setting:**	0
Properties:			
Access Groups via HMI:	HMI, SPLC		

Description:

This parameter selects decimal point that will be viewed on the HMI, that is, any SoftPLC user's parameter which is associated to engineering unit 2 will be viewed in this format.

NOTE!
The engineering unit 1 and 2 can be selected in P0209 or in the window "Configuration of User's Parameters" in the WLP program.

6 IDENTIFICATION OF THE INVERTER MODEL AND ACCESSORIES

In order to check the inverter model, see the code on the product identification label. The inverter has two identification labels: a complete one on the side of the inverter, and a summarized one under the HMI.

Once the inverter model identification code is checked, it is necessary to interpret it in order to understand its meaning. Refer to chapter 2 General Information of the CFW500 user's manual.

Below are the parameters related to the inverter model which change according to the inverter model and version. Those parameters must comply with the data read on the product identification label.

6.1 INVERTER DATA

P0023 – Main Software Version

P0024 – Secondary Software Version

Adjustable Range:	0.00 to 655.35	**Factory Setting:**	
Properties:	ro		
Access Groups via HMI:	READ		

Description:

These parameters indicate the software versions of the microprocessor: main one, on the control board of the CFW500 and secondary one, on the plug-in module. Those data are stored on the EEPROM memory located on the control board.

> **NOTE!**
> Parameter P0613 also shows the control number of the main software version.

P0027 – Plug-in Module Configuration

Adjustable Range:	0 to 11	**Factory Setting:**	
Properties:	ro		
Access Groups via HMI:	READ		

Description:

This parameter identifies the plug-in which is connected to the control module. Table 6.1 on page 6-2 presents the interfaces available for the CFW500.

Table 6.1: Identification of the plug-in modules of the CFW500

Name	Description	P0027
	No plug-in module connected	0
CFW500-IOS	Standard plug-in module (I/O Standard)	1
CFW500-IOD	Plug-in module with addition of digital inputs and outputs (Digital I/O)	2
CFW500-IOAD	Plug-in module with addition of analog and digital inputs and outputs (Analog and Digital I/O)	3
CFW500-IOR	Plug-in module with addition of relay digital outputs (I/O Relay)	4
CFW500-CUSB	Plug-in module with addition of a USB communication port	5
CFW500-CCAN	Plug-in module with addition of a CAN communication por	6
CFW500-CRS232	Plug-in module with addition of a RS-232 communication port	7
CFW500-CPDP	Plug-in module with PROFIBUS communication	8
CFW500-CRS485	Plug-in module with addition of a RS-485 communication port	9
CFW500-ENC	Plug-in module with encoder input ENC	10 and 13
CFW500-CETH-IP CFW500-CEMB-TCP CFW500-CEPN-IO	Plug-in module with EtherNet communication	11
CFW500-ENC2	Plug-in Module with encoder ENC2 input	12

P0029 – Power Hardware Configuration

6

Adjustable Range:	0 to 44	**Factory Setting:**	According to inverter model
Properties:	ro		
Access Groups via HMI:	READ		

Description:

This parameter identifies the inverter model, distinguishing frame, supply voltage and rated current as per Table 6.2 on page 6-3.

From P0029, the CFW500 determines the current and voltage parameters which depend on the identification of the model. On the other hand, this action is only executed at the moment the factory default is loaded (P0204 = 5 or 6).

Table 6.2: Identification of the CFW500 models for frames A to E

Voltage	Power Supply	Current	Frame	P0029
-	-	-	-	0
200-240	Single-Phase or Single-Phase/Three-Phase	1.6	A	1
200-240	Single-Phase or Single-Phase/Three-Phase	2.6	A	2
200-240	Single-Phase or Single-Phase/Three-Phase	4.3	A	3
200-240	Single-Phase or Three-Phase	7.0	A	4
200-240	Three-Phase	9.6	A	5
380-480	Three-Phase	1.0	A	6
380-480	Three-Phase	1.6	A	7
380-480	Three-Phase	2.6	A	8
380-480	Three-Phase	4.3	A	9
380-480	Three-Phase	6.1	A	10
200-240	Single-Phase or Three-Phase	7.3	B	11
200-240	Single-Phase or Three-Phase	10.0	B	12
200-240	Three-Phase	16.0	B	13
380-480	Three-Phase	2.6	B	14
380-480	Three-Phase	4.3	B	15
380-480	Three-Phase	6.5	B	16
380-480	Three-Phase	10.0	B	17
200-240	Three-Phase	24.0	C	18
380-480	Three-Phase	14.0	C	19
380-480	Three-Phase	16.0	C	20
500-600	Three-Phase	1.7	C	21
500-600	Three-Phase	3.0	C	22
500-600	Three-Phase	4.3	C	23
500-600	Three-Phase	7.0	C	24
500-600	Three-Phase	10.0	C	25
500-600	Three-Phase	12.0	C	26
200-240	Three-Phase	28.0	D	27
200-240	Three-Phase	33.0	D	28
380-480	Three-Phase	24.0	D	29
380-480	Three-Phase	30.0	D	30
500-600	Three-Phase	17.0	D	31
500-600	Three-Phase	22.0	D	32
200-240	Three-Phase	45.0	E	33
200-240	Three-Phase	54.0	E	34
380-480	Three-Phase	38.0	E	35
380-480	Three-Phase	49.0	E	36
500-600	Three-Phase	27.0	E	37
500-600	Three-Phase	32.0	E	38
-	-	-	-	39 to 44

P0295 – Inverter Rated Current

Adjustable Range:	0.0 to 200.0 A	**Factory Setting:**	According to inverter model
Properties:	ro		
Access Groups via HMI:	READ		

Description:

This parameter presents the inverter rated current as per Table 6.2 on page 6-3.

P0296 – Line Rated Voltage

Adjustable Range:	0 = 200 - 240 V 1 = 380 V 2 = 400 - 415 V 3 = 440 - 460 V 4 = 480 V 5 = 500 - 525 V 6 = 550 - 575 V 7 = 600 V	**Factory Setting:**	According to inverter model
Properties:	ro, cfg		
Access Groups via HMI:	READ		

Description:

This parameter presents the inverter power supply rated voltage as shown in Table 6.2 on page 6-3.

P0297 – Switching Frequency

Adjustable Range:	2500 to 15000 Hz	**Factory Setting:**	5000 Hz
Properties:	cfg		
Access Groups via HMI:			

Description:

You can use this parameter to define the inverter IGBT switching frequency.

The inverter switching frequency may be adjusted according to the application needs. Higher switching frequencies imply less acoustic noise in the motor. However, the switching frequency choice results in a compromise among the acoustic noise in the motor, the inverter IGBT losses and the maximum permitted currents.

The reduction of the switching frequency reduces the effects related to the motor instability, which occurs in certain application conditions. Besides, it reduces the earth leakage current, preventing the actuation of the faults F0074 (earth fault) or F0070 (output overcurrent or short-circuit).

NOTE!
The maximum value of the switching frequency for sensorless vector control (P0202 = 3) is 8 kHz. The maximum value of the switching frequency for sensorless vector control with encoder (P0202 = 4) is 10 kHz.

ATTENTION!
When the data of the output current as a function of the switching frequency are different from the standard, refer to table B.4 available in Appendix B – Technical Specifications of the CFW500 user's manual.

P0613 – Software Revision

Adjustable Range:	0 to 65535	**Factory Setting:**	According to software revision
Properties:	ro		
Access Groups via HMI:	READ		

Description:

This parameter is a counter that indicates the software revision. It is automatically generated by the machine that generated the firmware.

7 LOGICAL COMMAND AND SPEED REFERENCE

The drive of the electric motor connected to the inverter depends on the logical command and on the reference defined by one of the several possible sources, such as: HMI keys, digital inputs (DIx), analog inputs (AIx), serial/USB interface, CANopen interface, DeviceNet interface, SoftPLC, etc.

The command via HMI is limited to a set of functions pre-defined for the keys according to Chapter 4 HMI AND BASIC PROGRAMMING on page 4-1, similarly to the digital inputs (DIx), with the functions implemented in parameter P0263 to P0270.

On the other hand, the command via digital interfaces, such as communication network and SoftPLC, act directly on the inverter control word by means of control parameters and system markers of the SoftPLC, respectively.

The speed reference, in turn, is processed inside the CFW500 in 16 bits with signal (-32768 to +32767) for a range of -500.0 Hz to +500.0 Hz. On the other hand, the unit factor, range and resolution of the reference depend on the used source, as described in Section 7.2 SPEED REFERENCE on page 7-7.

7.1 SELECTION FOR LOGICAL COMMAND AND SPEED REFERENCE

The inverter command and reference source is defined by the inverter parameters for two different situations: Local and Remote, which can be switched dynamically during the inverter operation. Thus, for a certain parameterization, the inverter has two sets for command and reference, according to block diagram of Figure 7.1 on page 7-2.

Parameter P0220 determines the source of commands for Local and Remote situations.

Parameters P0223, P0224 and P0225 define the commands in the Local situation; parameters P0226, P0227 and P0228 define the commands in the Remote situation, and parameter P0105 determines the source for selection between 1st and 2nd Ramp. This structure for the selection of the command source is shown in Figure 7.2 on page 7-3, where parameter P0312 directs the serial communication source for the plug-in modules with two ports.

Parameters P0221 and P0222 define the speed reference in the Local and Remote situations.

This structure for the selection of the reference source is shown in Figure 7.3 on page 7-4, where parameter P0312 directs the serial communication source to the plug-in modules with two ports.

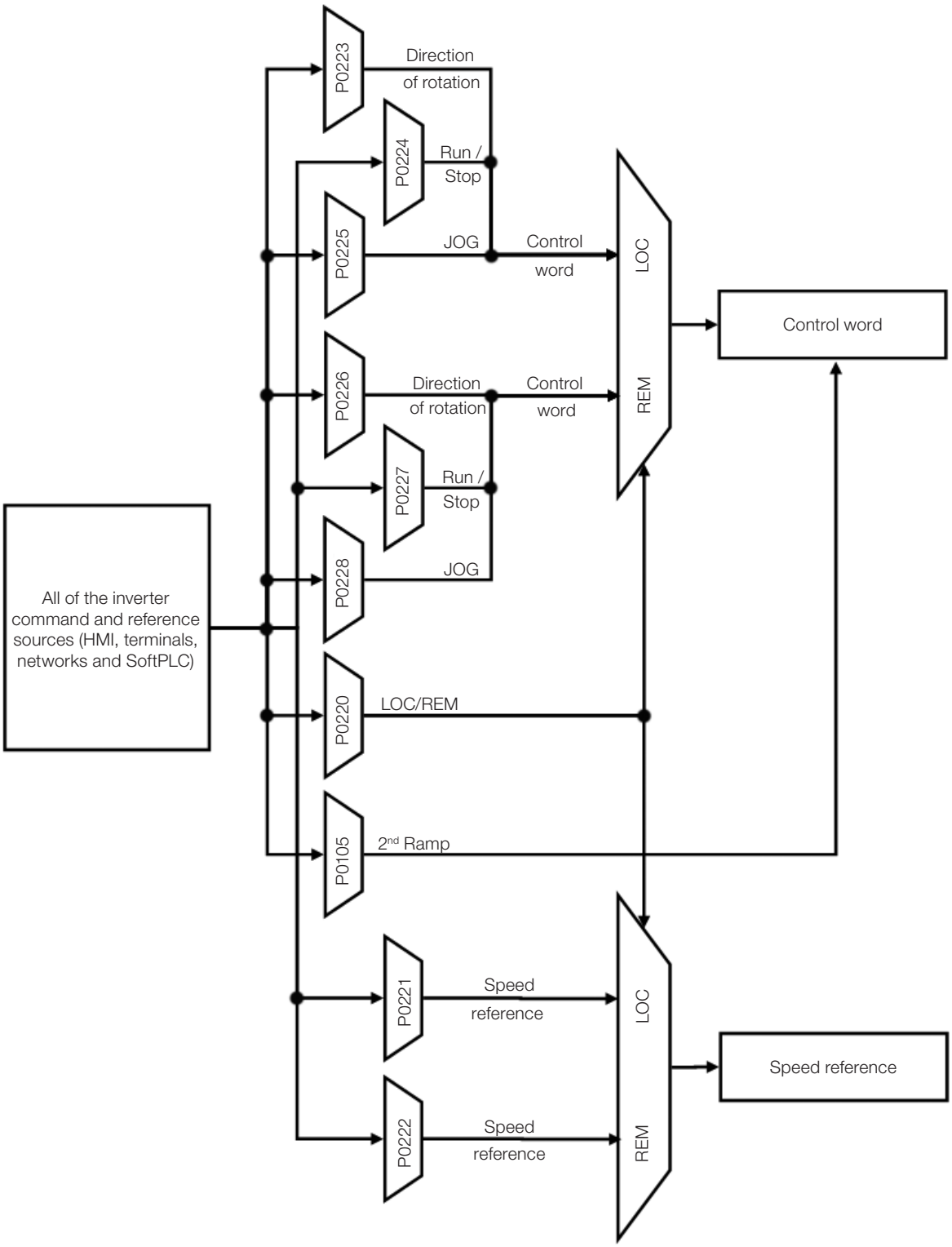

Figure 7.1: *General block diagram for commands and references*

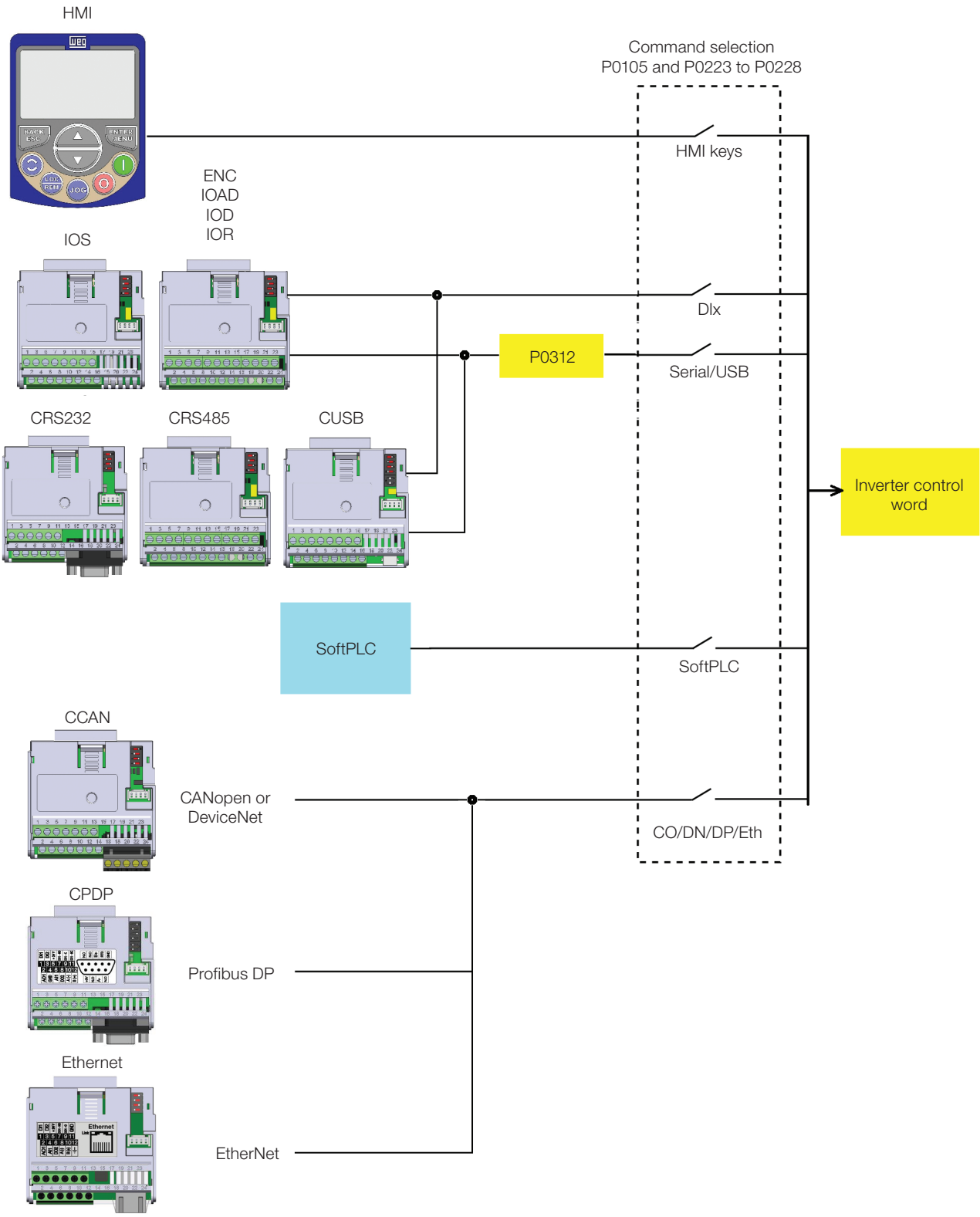

Figure 7.2: Command selection structure

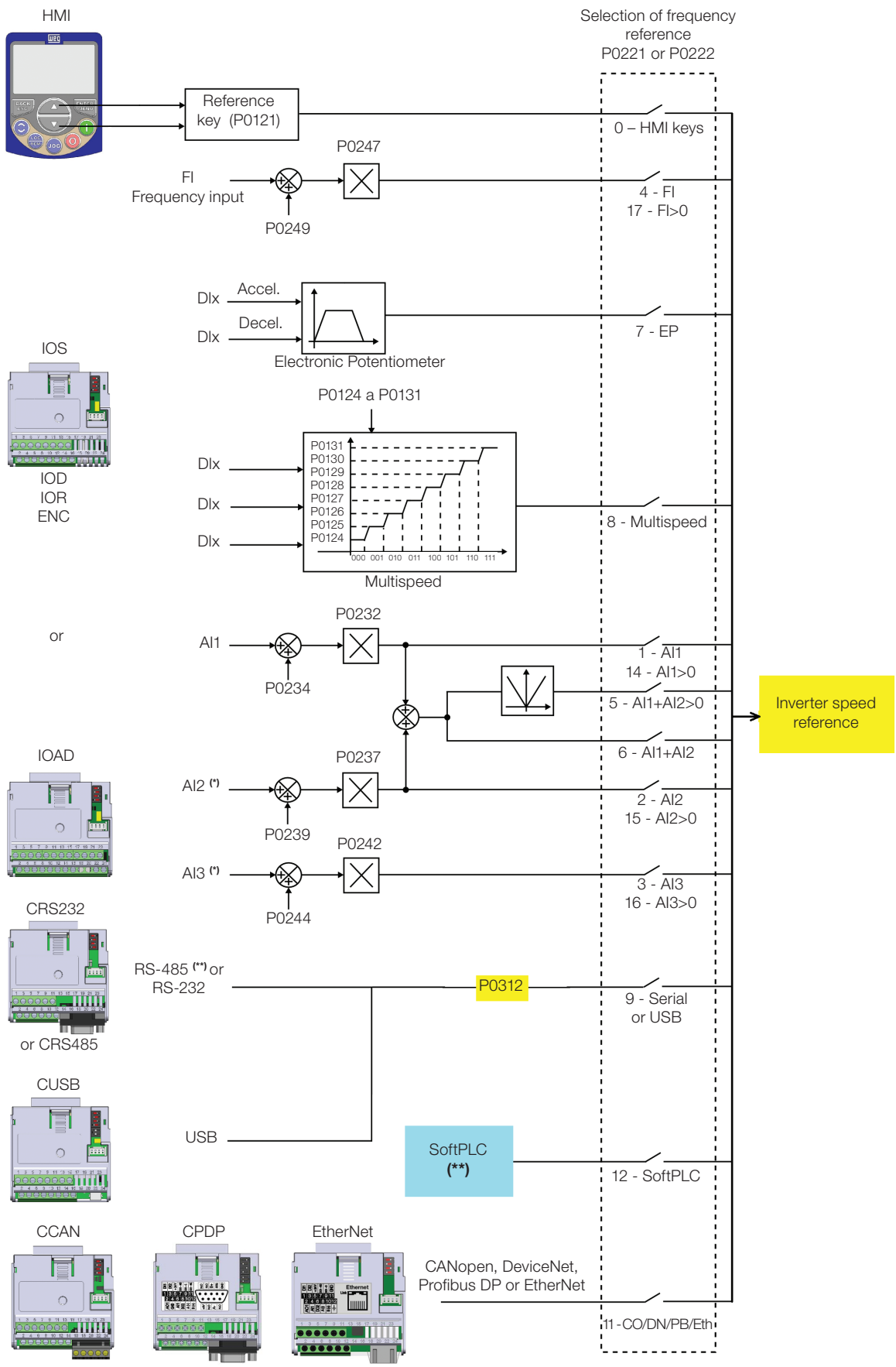

(*) Available only on the plug-in CFW500-IOAD module.
(**) Available in all plug-in modules.

Figure 7.3: *Structure to select the speed reference*

P0220 – Local/Remote Selection

Adjustable Range:	0 = Always Local 1 = Always Remote 2 = Local/Remote HMI Key (LOC) 3 = Local/Remote HMI Key (REM) 4 = Digital Input (DIx) 5 = Serial/USB (LOC) 6 = Serial/USB (REM) 7 = Not Used 8 = Not Used 9 = CO/DN/PB/Eth (LOC) 10 = CO/DN/PB/Eth (REM) 11 = SoftPLC	**Factory Setting:**	2
Properties:	cfg		
Access Groups via HMI:	I/O		

Description:

It defines the command origin source which will select between Local situation and Remote situation, where:

- **LOC:** means Local situation default.
- **REM:** means Remote situation default.
- **DIx:** according to function programmed for digital input in P0263 to P0270.
- **CO/DN/PB/Eth:** CANopen, DeviceNet, Profibus DP or EtherNet Interface.

P0221 – Speed Reference Selection – LOCAL Situation

P0222 – Speed Reference Selection – REMOTE Situation

Adjustable Range:	0 = HMI Keys 1 = AI1 2 = AI2 3 = AI3 4 = Frequency input (FI) 5 = AI1 + AI2 > 0 (Sum AIs > 0) 6 = AI1 + AI2 (Sum AIs) 7 = E.P. 8 = Multispeed 9 = Serial/USB 10 = Not Used 11 = CO/DN/PB/Eth 12 = SoftPLC 13 = Not Used 14 = AI1 > 0 15 = AI2 > 0 16 = AI3 > 0 17 = FI > 0	**Factory Setting:**	P0221 = 0 P0222 = 1
Properties:	cfg		
Access Groups via HMI:	I/O		

Description:

These parameters define the origin source for the speed reference in the Local situation and Remote situation. Some comments on the options of this parameter:

- **AIx:** it refers to the analog input signal according to Section 14.1 ANALOG INPUTS on page 14-1.
- **HMI:** the reference value set by the keys ▲ and ▼ contained in parameter P0121.
- **E.P.:** electronic potentiometer; refer to Section 14.5 DIGITAL INPUTS on page 14-14.
- **Multispeed:** refer to Section 14.5 DIGITAL INPUTS on page 14-14.
- When P0203 = 1, the value set in P0221 and P0222 becomes the PID Setpoint and no longer the speed reference. The PID Setpoint is shown in P0040 and saved in P0525 when the source is the HMI keys.
- **AIx > 0:** the negative values of the AIx reference are zeroed.
- **CO/DN/PB/Eth:** CANopen, DeviceNet, Profibus DP or EtherNet Interface.

P0223 – Direction of Rotation Selection – LOCAL Situation

P0226 – Direction of Rotation Selection – REMOTE Situation

Adjustable Range:	0 = Clockwise 1 = Counterclockwise 2 = HMI Key (H) 3 = HMI Key (AH) 4 = DIx 5 = Serial/USB (H) 6 = Serial/USB (AH) 7 = Not Used 8 = Not Used 9 = CO/DN/PB/Eth (H) 10 = CO/DN/PB/Eth (AH) 11 = Not Used 12 = SoftPLC	**Factory Setting:**	P0223 = 2 P0226 = 4
Properties:	cfg		
Access Groups via HMI:	I/O		

Description:

These parameters define the origin source for the "Direction of Rotation" command in the Local and Remote situation, where:

- **H:** means clockwise default at the inverter power-up.
- **AH:** means counterclockwise default at the inverter power-up.
- **DIx:** refer to Section 14.5 DIGITAL INPUTS on page 14-14.
- The polarity option AI3 (11) defines the counterclockwise direction of rotation if the referred analog input operated by the gain and offset results in negative signal as per Section 14.1 ANALOG INPUTS on page 14-1.
- **CO/DN/PB/Eth**: CANopen, DeviceNet, Profibus DP or EtherNet Interface.

P0224 – Run / Stop Selection – LOCAL Situation

P0227 – Run / Stop Selection – REMOTE Situation

Adjustable Range:	0 = HMI Keys 1 = DIx 2 = Serial/USB 3 = Not Used 4 = CO/DN/PB/Eth 5 = SoftPLC	**Factory Setting:**	P0224 = 0 P0227 = 1
Properties:	cfg		
Access Groups via HMI:	I/O		

Description:

These parameters define the origin source for the "Run/Stop" command in the Local and Remote situation. This command corresponds to the functions implemented in any of the command sources able to enable the motor movement, that is, General Enable, Ramp Enable, Forward Run, Reverse Run, Turn ON, Turn OFF, JOG, etc.

P0225 – JOG Selection – LOCAL Situation

P0228 – JOG Selection – REMOTE Situation

Adjustable Range:	0 = Disable 1 = HMI Keys 2 = DIx 3 = Serial/USB 4 = Not Used 5 = CO/DN/PB/Eth 6 = SoftPLC	**Factory Setting:**	P0225 = 1 P0228 = 2
Properties:	cfg		
Access Groups via HMI:	I/O		

Description:

These parameters define the origin source for the JOG function in the Local and Remote situation. The JOG function means a Run/Stop command added to the reference defined by P0122; see Item 7.2.3 Speed Reference Parameters on page 7-10.

7.2 SPEED REFERENCE

The speed reference is the value applied to the input of the acceleration ramp module (P0001) to control the frequency applied to the inverter output (P0002) and consequently the motor shaft speed.

Inside the CPU, the inverter uses signed 16 bit variables to treat the speed references. Besides, the full scale of the reference, output frequency and related variables are defined in 500.0 Hz. On the other hand, depending on the source, this scale is conveniently modified considering the interface with the user by standardization or application requirements.

In general, the digital references are defined by parameters like: HMI keys (P0121), Multispeed (P0124 to P0131), E.P. and JOG have a scale from 0.0 to 500.0 Hz with resolution of 0.1 Hz. On the other hand the speed reference via analog input uses a 16-bit internal scale with signal with the full scale in 500.0 Hz.

The speed reference via HMI can be the JOG key or electronic potentiometer of the keys "▲" and "▼" on parameter P0121.

In digital inputs (DIx), on the other hand, the reference is defined according to the function predefined for P0263 to P0270.

The speed reference via analog inputs and frequency input is according to the signal, gain and offset parameters P0230 to P0250. The full scale of the reference is always by P0134, that is, maximum value in AIx is equivalent to the speed reference equal to P0134.

The digital references Serial/USB, CANopen, DeviceNet and SoftPLC act on a standardized scale called "13-bit speed", where the value 8192 (2^{13}) is equivalent to the motor rated speed by P0403. Those references are accessed by parameters P0683, P0685 and system marker of the SoftPLC, respectively.

The digital references, though, have a different scale and the speed reference parameters with their range from 0.0 to 500.0 Hz, according to previous descriptions. The frequency value on the ramp input (P0001) is always limited by P0133 and P0134. For example, the JOG reference is given by P0122; this parameter may be set in up to 500.0 Hz, but the value applied to the ramp input as reference will be limited by P0134 when the function is executed.

Table 7.1: *Summary of the scales and resolutions of the speed references*

Reference	Full Scale	Resolution
Analog inputs (AIx)	- P0134 to P0134	10 bits or (P0134 / 1024)
Communication networks and SoftPLC	-500.0 Hz to 500.0 Hz	Speed 13 bits (P0403 / 8192)
HMI parameters	-500.0 Hz to 500.0 Hz	0.1 Hz

7.2.1 Speed Reference Limits

Although the parameters to adjust the reference have a wide range of values (0 to 500.0 Hz), the value applied to the ramp is limited by P0133 and P0134. Therefore, the values in module out of this range will have no effect on the reference.

P0132 – Maximum Overspeed Level

Adjustable Range:	0 to 100 %	**Factory Setting:**	10 %
Properties:	cfg		
Access Groups via HMI:	BASIC		

Description:

This parameter sets the highest speed allowed for the motor to operate, and must be adjusted as a percentage of the maximum speed limit (P0134).

When the actual speed exceeds the value of P0134 + P0132 longer than 20 ms, the CFW500 will disable the PWM pulses and indicate the fault (F0150).

In order to disable this function, set P0132 = 100 %.

P0133 – Minimum Speed Reference

Adjustable Range:	0.0 to 500.0 Hz	**Factory Setting:**	3.0 Hz

NOTE!
For VVW PM control, the value of P0133 after oriented Start-Up is 10% of the synchronous motor speed in Hz.

P0134 – Maximum Speed Reference

Adjustable Range:	0.0 to 500.0 Hz	**Factory Setting:**	66.0 (55.0) Hz
Properties:			
Access Groups via HMI:	BASIC		

Description:

Limits for the inverter speed reference. Those limits are applied to any reference source, even in the case of 13-bit speed reference.

7

7.2.2 Speed Reference Backup

P0120 – Speed Reference Backup

Adjustable Range:	0 = Inactive 1 = Active 2 = Backup by P0121	**Factory Setting:**	1
Properties:			
Access Groups via HMI:			

Description:

This parameter defines the operation of the speed reference backup function between the options active (P0120 = 1), inactive (P0120 = 0) and by P0121 (P0120 = 2). This function, in turn, determines the form of backup of digital references and sources: HMI (P0121), E.P., Serial/USB (P0683), CANopen/DeviceNet (P0685), SoftPLC (P0687) and PID Setpoint (P0525) according to Table 7.2 on page 7-9.

Table 7.2: *Options of parameter P0120*

P0120	Reference Initial Values at the Enabling or Power-Up
0	Value of P0133
1	Last adjusted value
2	Value of P0121

If P0120 = Inactive, the inverter will not save the speed reference value when it is disabled. Thus, when the inverter is enabled again, the speed reference value will become the speed minimum limit value (P0133).

If P0120 = Active, the value set in the reference is not lost when the inverter is disabled or powered down.

If P0120 = Backup by P0121, the reference initial value is fixed by P0121 at the enabling or power-up of the inverter.

7.2.3 Speed Reference Parameters

P0121 – Speed Reference via HMI

Adjustable Range:	0.0 to 500.0 Hz	**Factory Setting:**	3.0 Hz
Properties:			
Access Groups via HMI:			

Description:

Parameter P0121 stores the speed reference via HMI (P0221 = 0 or P0222 = 0). When the keys "▲" and "▼" are active and the HMI in the monitoring mode, the value of P0121 is increased and shown on the HMI main display. Besides, the P0121 is used as input for the reference backup function.

> **NOTE!**
> The maximum setting value of parameter P0121 via HMI is limited by P0134.

P0122 – Speed Reference for JOG

Adjustable Range:	-500.0 to 500.0 Hz	**Factory Setting:**	5.0 Hz
Properties:			
Access Groups via HMI:			

Description:

During the JOG command, the motor accelerates up to the value defined in P0122, following the acceleration ramp set according to P0105. This command may be activated by any of the sources, as per Section 7.1 SELECTION FOR LOGICAL COMMAND AND SPEED REFERENCE on page 7-1. The negative values determine a direction of rotation opposite to that defined by the inverter command word.

P0124 – Multispeed Reference 1

Adjustable Range:	-500.0 to 500.0 Hz	**Factory Setting:**	3.0 Hz

P0125 – Multispeed Reference 2

Adjustable Range:	-500.0 to 500.0 Hz	**Factory Setting:**	10.0 (5.0) Hz

P0126 – Multispeed Reference 3

Adjustable Range:	-500.0 to 500.0 Hz	**Factory Setting:**	20.0 (10.0) Hz

P0127 – Multispeed Reference 4

Adjustable Range:	-500.0 to 500.0 Hz	**Factory Setting:**	30.0 (20.0) Hz

P0128 – Multispeed Reference 5

Adjustable Range:	-500.0 to 500.0 Hz	**Factory Setting:**	40.0 (30.0) Hz

P0129 – Multispeed Reference 6

Adjustable Range:	-500.0 to 500.0 Hz	**Factory Setting:**	50.0 (40.0) Hz

P0130 – Multispeed Reference 7

Adjustable Range:	-500.0 to 500.0 Hz	**Factory Setting:**	60.0 (50.0) Hz

P0131 – Multispeed Reference 8

Adjustable Range:	-500.0 to 500.0 Hz	**Factory Setting:**	66.0 (55.0) Hz
Properties:			
Access Groups via HMI:			

Descriptions:

By the combination of up to three digital inputs, one from eight levels that form the Multispeed reference is selected. Read the description of the digital input in Section 14.5 DIGITAL INPUTS on page 14-14, as well as the reference selection in Section 7.1 SELECTION FOR LOGICAL COMMAND AND SPEED REFERENCE on page 7-1. The negative values determine a direction of rotation opposite to that defined by the inverter command word (Bit 2 of P0682 and P0684).

Figure 7.4 on page 7-12 and Table 7.3 on page 7-12 show the operation of the Multispeed, considering digital inputs programmed for NPN in P0271. Although the most relevant digital input can be programmed in DI1, DI2, DI5 or DI6, only one of those options is allowed; otherwise, the config status (CONF), according to Section 5.6 SITUATIONS FOR CONFIG STATUS on page 5-7, is activated to indicate parameterization incompatibility.

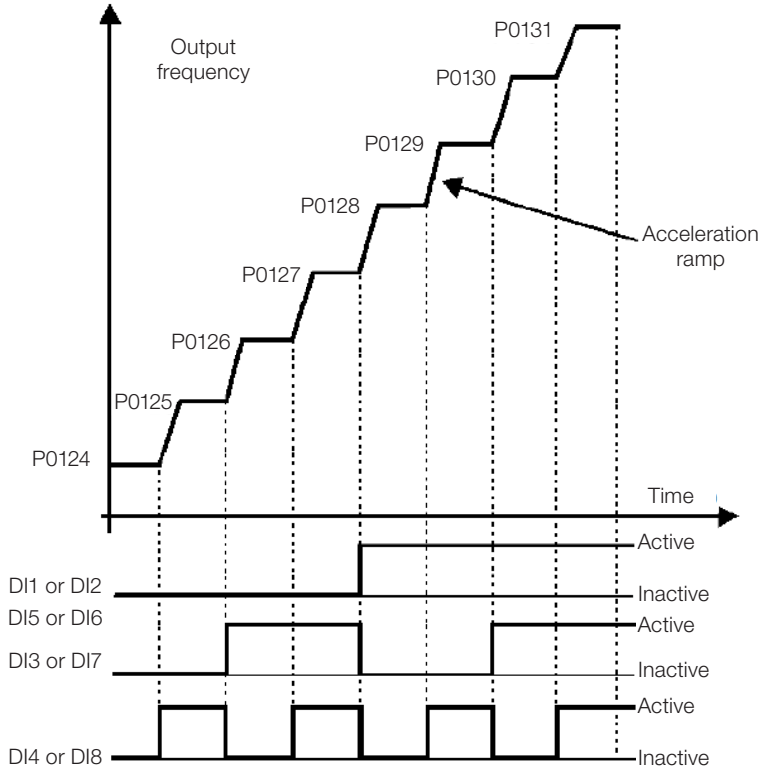

Figure 7.4: *Operating graph of the Multispeed function*

Table 7.3: *Multispeed speeds*

8 Speeds			
	4 Speeds		
		2 Speeds	
DI1 or DI2 or DI5 or DI6	**DI3 or DI7**	**DI4 or DI8**	**Speed Reference**
Open	Open	Open	P0124
Open	Open	0 V	P0125
Open	0 V	Open	P0126
Open	0 V	0 V	P0127
0 V	Open	Open	P0128
0 V	Open	0 V	P0129
0 V	0 V	Open	P0130
0 V	0 V	0 V	P0131

7.2.4 Reference via Electronic Potentiometer

The Electronic Potentiometer function (E.P.) allows the speed reference to be set by means of two digital inputs (one to increment it and another to decrement it).

In order to enable this function, you must first configure the speed reference via E.P., making P0221 = 7 and/or P0222 = 7. After enabling this function, just program two digital inputs (P0263 to P0270) in 11 or 33 (Accelerate E.P.) and 12 or 34 (Decelerate E.P.).

Figure 7.5 on page 7-13 show the operation of the E.P. function using DI3 as Accelerate E.P. (P0265 = 11), DI4 as Decelerate E.P. (P0266 = 12) and DI1 as Run/Stop (P0263 = 1). In this example, the reference reset is done with the inverter disabled and activating both Accelerate and Decelerate E.P. inputs. Besides, you can monitor the action of the inputs individually, as well as the action of the reference backup (P0120 = 1) when the Run/Stop command is opened and closed again.

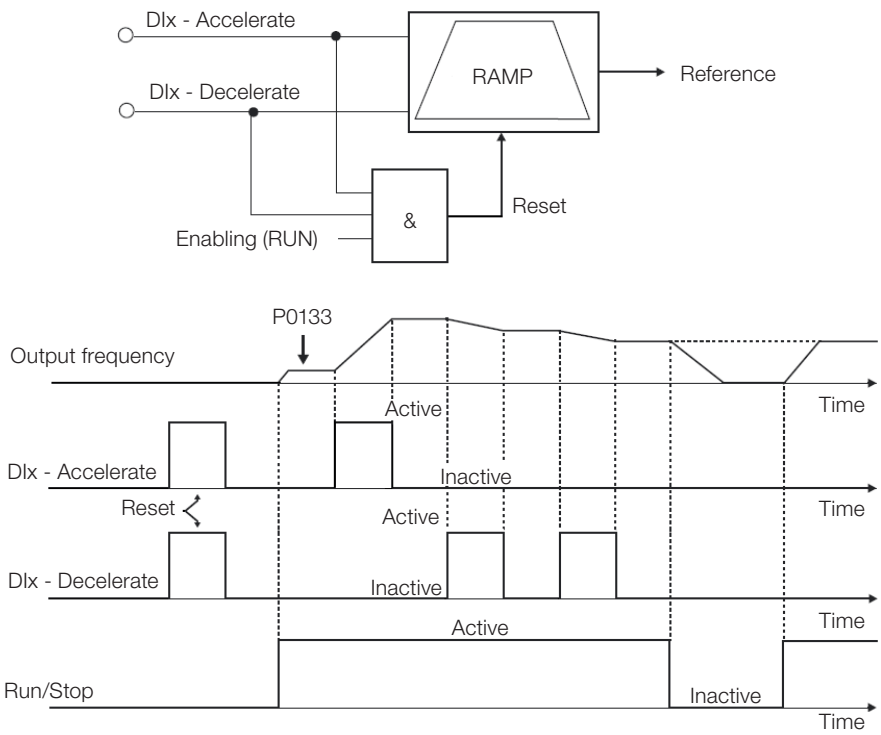

Figure 7.5: *Operating graph of the E.P. function*

7.2.5 Analog Input AIx and Frequency Input FI

The behaviors of the analog input and frequency input are described in details in Section 14.1 ANALOG INPUTS on page 14-1. Thus, after the proper signal treatment, it is applied to the ramp input according to the selection of the reference described in Section 7.1 SELECTION FOR LOGICAL COMMAND AND SPEED REFERENCE on page 7-1.

7.2.6 13-Bit Speed Reference

The 13-bit speed reference is a scale based on the motor rated speed (P0402) or on the motor rated frequency (P0403). In the CFW500, parameter P0403 is taken as the base to determine the speed reference. Thus, the 13-bit speed value has a range of 16 bits with signal, that is, -32768 to 32767; however, the rated frequency in P0403 is equivalent to the value 8192. Therefore, the maximum value in the range 32767 is equivalent to four times P0403.

The 13-bit speed reference is used in parameters P0681, P0683, P0685 and system markers for the SoftPLC, which are related to the interfaces with communication networks and SoftPLC function of the product.

7.3 CONTROL WORD AND INVERTER STATUS

The inverter control word is the grouping of a set of bits to determine the commands received by the inverter from an external source. On the other hand, the status word is another set of bits that define the inverter status. This way, the control and status words establish an interface for the exchanging of information between the inverter and an external module, such as a communication network or a controller.

P0680 – Logical Status

Adjustable Range:	0000h to FFFFh	**Factory Setting:**	
Properties:	ro		
Access Groups via HMI:	READ, NET		

Description:

The inverter status word is unique for all the sources and can only be accessed for reading. It indicates all the relevant operating status and modes of the inverter. The function of each bit of P0680 is described in Table 7.4 on page 7-14.

Table 7.4: *Status word*

Bit	Function	Description
0	Reserved	
1	Run Command	**0:** There was no command Run **1:** There was command Run
2 and 3	Reserved	
4	Quick Stop	**0:** Quick Stop inactive **1:** Quick Stop active
5	2nd Ramp	**0:** 1st Acceleration and deceleration ramp by P0100 and P0101 **1:** 2nd Acceleration and deceleration ramp by P0102 and P0103
6	Config. Status	**0:** Inverter operating in normal conditions **1:** Inverter in configuration state. It indicates a special condition in which the inverter cannot be enabled, because it has parameterization incompatibility
7	Alarm	**0:** Inverter is not in Alarm state **1:** Inverter is in Alarm state
8	Running	**0:** Motor is stopped **1:** Inverter is running according to reference and command
9	Enabled	**0:** Inverter is completely disabled **1:** Inverter is completely enabled and ready to turn the motor
10	Clockwise	**0:** Motor spinning counter clockwise **1:** Motor spinning clockwise
11	JOG	**0:** JOG function inactive **1:** JOG function active
12	Remote	**0:** Inverter in Local mode **1:** Inverter in Remote mode
13	Undervoltage	**0:** No Undervoltage **1:** With Undervoltage
14	Automatic	**0:** In Manual mode (PID function) **1:** In Automatic mode (PID function)
15	Fault	**0:** Inverter is not in Fault state **1:** Some fault registered by the inverter

P0690 – Logical Status 2

Adjustable Range:	0000h to FFFFh	**Factory Setting:**	
Properties:	ro		
Access Groups via HMI:	READ, NET		

Description:

Parameter P0690 presents other signaling bits for functions exclusively implemented in the CFW500. The function of each bit of P0690 is described in Table 7.5 on page 7-15.

Table 7.5: Status word

Bit	Function	Description
0 to 3	Reserved	
4	Fs Reduction	**0:** Output frequency reduction inactive **1:** Output frequency reduction active
5	Sleep Mode	**0:** Sleep mode inactive **1:** Sleep mode active
6	Deceleration Ramp	**0:** No deceleration **1:** Inverter decelerating
7	Acceleration Ramp	**0:** No acceleration **1:** Inverter accelerating
8	Frozen Ramp	**0:** Ramp operating in normal conditions **1:** The path of the ramp is frozen by some command source or internal function
9	Setpoint Ok	**0:** Output frequency has not reached reference yet **1:** Output frequency reached reference
10	DC Link Regulation	**0:** DC Link Regulation or Current Limitation inactive **1:** DC Link Regulation or Current Limitation active (P0150)
11	Configuration in 50 Hz	**0:** Factory default loaded in 60 Hz (P0204 = 5) **1:** Factory default loaded in 50 Hz (P0204 = 6)
12	Ride-Through	**0:** No execution of Ride-Through **1:** Executing Ride-Through
13	Flying Start	**0:** No execution of Flying Start **1:** Executing Flying Start
14	DC Braking	**0:** DC breaking inactive **1:** DC breaking active
15	PWM Pulses	**0:** PWM voltage pulses in the output disabled **1:** PWM voltage pulses in the output enabled

P0682 – Serial Control

P0684 – CANopen/DeviceNet/Profibus DP/Ethernet Control

Adjustable Range:	0000h to FFFFh	**Factory Setting:**	
Properties:	ro		
Access Groups via HMI:	NET		

Description:

The inverter control word for a certain source is accessible for reading and writing, but read only access is permitted for the other sources. The inverter has a common word for interface, which is defined by the function of its bits separately as per Table 7.6 on page 7-16.

Table 7.6: Control word

Bit	Function	Description
0	Ramp Enable	**0:** Stops the motor by deceleration ramp **1:** Turn the motor according to the acceleration ramp until reaching the speed reference value
1	General Enable	**0:** Disable the inverter completely, interrupting the power supply to the motor **1:** Enable completely the inverter, allowing the operation of the motor
2	Run Clockwise	**0:** Run the motor in the opposite direction of the reference signal (counter clockwise) **1:** Run the motor in direction of the reference signal (clockwise)
3	JOG Enable	**0:** Disable JOG function **1:** Enable JOG function
4	Remote	**0:** Inverter goes into Local mode **1:** Inverter goes into Remote mode
5	2nd Ramp	**0:** Acceleration and deceleration ramp by P0100 and P0101 **1:** Acceleration and deceleration ramp by P0102 and P0103
6	Quick Stop	**0:** Disable Quick Stop **1:** Enable Quick Stop
7	Fault Reset	**0:** No function **1:** If in fault state, reset the fault
8 to 15	Reserved	

P0229 – Stop Mode Selection

7

Adjustable Range:	0 = Ramp to Stop 1 = Coast to Stop 2 = Quick Stop	**Factory Setting:**	0
Properties:	cfg		
Access Groups via HMI:	I/O		

Description:

This parameter defines the motor stop mode when the inverter receives the "Stop" command. Table 7.7 on page 7-16 describes the options of this parameter.

Table 7.7: Selection of stop mode

P0229	Description
0	The inverter will apply the stop ramp programmed in P0101 and/or P0103
1	The motor will run free until it stops
2	The inverter will apply the stop ramp programmed in P0106

NOTE!
When the Coast Stop mode is programmed and the Flying Start function is disabled, only activate the motor if it is stopped.

NOTE!
This parameter is applied to all the inverter command sources, but it was created aiming at allowing the command via HMI to be able to disable the motor by inertia instead of deceleration ramp. In this way, when P0229 = 1, Bit 0 of the control word (Ramp Enable) has a function similar to Bit 1 (General Enable). The same way, the digital input functions such as: Run/Stop, Forward/Reverse Run and Command with Three Wires turn off the motor by inertia in this condition of P0229.

7.3.1 Control via HMI Inputs

Contrary to the network interfaces and SoftPLC, the HMI commands do not access the inverter control word directly, because of limitations of key functions and HMI behavior. The HMI behavior is described in Chapter 4 HMI AND BASIC PROGRAMMING on page 4-1.

7.3.2 Control via Digital Inputs

Contrary to the network interfaces and SoftPLC, the digital inputs do not access the inverter control word directly, because there are several functions for DIx that are defined by the applications.

Such digital input functions are detailed in Chapter 14 DIGITAL AND ANALOG INPUTS AND OUTPUTS on page 14-1.

8 AVAILABLE MOTOR CONTROL TYPES

The inverter feeds the motor with variable voltage, current and frequency, providing control of the motor speed. The values applied to the motor follow a control strategy, which depends on the selected type of motor control and on the inverter parameter settings.

The selection of the proper control type for the application depends on the static and dynamic requirements of torque and speed of the driven load, that is, the control type is directly connected to the required performance. Additionally, proper configuration of the selected control mode parameters is essential to reach maximum performance.

The CFW500 is equipped with four control modes for the three-phase induction motor, that are:

- **V/f Scalar Control:** for basic applications without output speed control.
- **VVW Control:** for applications that need high performance in the control of the output speed without the use of speed sensor.
- **VVW PM Control:** for high performance applications in output speed regulation without a speed sensor.
- **Sensorless Vector Control:** for very high performance applications in the regulation of the output speed without speed sensor.
- **Vector Control with Encoder:** for very high performance applications in the regulation of the output speed with control robustness at zero speed by means of a speed sensor.

In Chapter 9 V/f SCALAR CONTROL on page 9-1, Chapter 10 VVW CONTROL on page 10-1, Chapter 11 VVW PM CONTROL on page 11-1 and Chapter 12 VECTOR CONTROL on page 12-1 each of these kinds of control, related parameters and directions regarding the use of each of these modes are described in details.

P0202 – Control Type

Adjustable Range:	0 = V/f 1 and 2 = Not Used 3 = Sensorless Vector Control 4 = Vector Control with Sensor 5 = VVW 6 and 7 = Not Used 8 = VVW PM	**Factory Setting:**	0
Properties:	cfg		
Access Groups via HMI:	STARTUP		

Description:

This parameter selects the kind of three-phase induction motor control or three phase permanent magnet motor used.

NOTE!
VVW PM control is not supported by frame A CFW500. When setting P0202 = 8 on a frame A inverter, it goes into the CONFIG state.

P0139 – Output Current Filter

Adjustable Range:	0 to 9999 ms	**Factory Setting:**	50 ms
Properties:	V/f, VVW		
Access Groups via HMI:			

Description:

Time constant of the filter for the total and active output current. You must consider a filter response time equal to three times the time constant set in P0139 (50 ms).

P0140 – Slip Compensation Filter

Adjustable Range:	0 to 9999 ms	**Factory Setting:**	500 ms
Properties:	VVW		
Access Groups via HMI:			

Description:

Time constant of the filter for slip compensation in the output frequency. You must consider a filter response time equal to three times the time constant set in P0140 (500 ms).

P0397 – Control Configuration

Adjustable Range:	Bit 0 = Regen. Slip Comp. Bit 1 = Dead Time Comp. Bit 2 = Is Stabilization Bit 3 = Red. P0297 in A0050 Bit 4 = Reservad Bit 5 = Ud Compensation to VVW PM	**Factory Setting:**	Bit 4 to 5
Properties:	cfg		
Access Groups via HMI:			

Description:

This configuration parameter is input in hexadecimal form, with each bit having its meaning according to the description below.

- **Slip Compensation during the Regeneration (Bit 0)**

The regeneration is an operating mode of the inverter which occurs when the power flux goes from the motor to the inverter. The Bit 0 of P0397 (set in 0) allows the slip compensation to be turned off in this situation. This option is particularly useful when the compensation during the motor deceleration is necessary.

- **Dead Time Compensation (Bit 1)**

The dead time is a time interval introduced in the PWM necessary for the commutation of the power inverter bridge. On the other hand, the dead time generates distortions on the voltage applied to the motor, which can cause torque reduction at low speeds and current oscillation in motors above 5 HP running with no load. Thus, the dead time compensation measures the voltage pulse width in the output and compensates this distortion introduced by the dead time.

Bit 1 of P0397 (set in 0) allows deactivating this compensation. This feature is useful when there is a problem related to the inverter internal circuit for pulse feedback causing fault F0182. Thus, the compensation and the fault can be disabled while the underlying cause of the problem cannot be solved.

- **Output Current Stabilization (Bit 2)**

High-performance motors with power above 5 HP operate on the edge of stability, and may become unstable when driven by frequency inverters and at operation with no load. Therefore, in this situation a resonance may occur in the output current which may reach the overcurrent level F0070. Bit 2 of P0397 (set in 1) activates a regulation algorithm of the output current in closed loop, which tries to compensate the resonant current oscillations, improving the performance in low load / no load situations. This load situation only occurs in the V/f and VVW control modes where the inverter is a voltage source.

- **Reduction of P0297 in Alarm A0050 (Bit 3)**

Bit 3 of P0397 controls the overtemperature protection action, refer to Section 17.4 IGBTS OVERTEMPERATURE PROTECTION (F0051 AND A0050) on page 17-5.

ATTENTION!
The default setting of P0397 meets most application needs of the inverter.
Therefore, avoid modifying its content without knowing the related consequences. If you are not sure, contact WEG Technical Assistance before changing P0397.

9 V/f SCALAR CONTROL

This is the classical control method for three-phase induction motors, based on a curve that relates output frequency and voltage. The inverter works as a variable frequency and voltage source, generating a combination of voltage and frequency according to the configured curve. It is possible to adjust this curve for standard 50 Hz, 60 Hz or special motors.

According to the block diagram of Figure 9.1 on page 9-2, the speed reference **f*** is limited by P0133 and P0134 and applied to the input of "V/f CURVE" block, where the output voltage amplitude and frequency imposed to the motor are obtained. For further details on the speed reference, refer to Chapter 7 LOGICAL COMMAND AND SPEED REFERENCE on page 7-1.

By monitoring the total and active output current, and the DC Link voltage, compensators and regulators are implanted so as to help in the protection and performance of the V/f control. The operation and parameterization of those blocks are detailed in Section 9.3 DC LINK VOLTAGE AND OUTPUT CURRENT LIMITATION on page 9-8.

The advantage of the V/f control is its simplicity and the need of few settings. The start-up is quick and simple, normally requires little or no modification. Besides, in cases where the application allows the proper adjustments of the V/f curve, you save energy.

The V/f or scalar control is recommended for the following cases:

- Drive of several motors with the same inverter (multi-motor drive).
- Energy saving in the drive of loads with quadratic torque/speed relationship.
- Motor rated current lower than 1/3 of the inverter rated current.
- For test purposes, the inverter is turned on without motor or with a small motor with no load.
- Applications where the load connected to the inverter is not a three-phase induction motor.
- Use of the EOC function for energy saving.

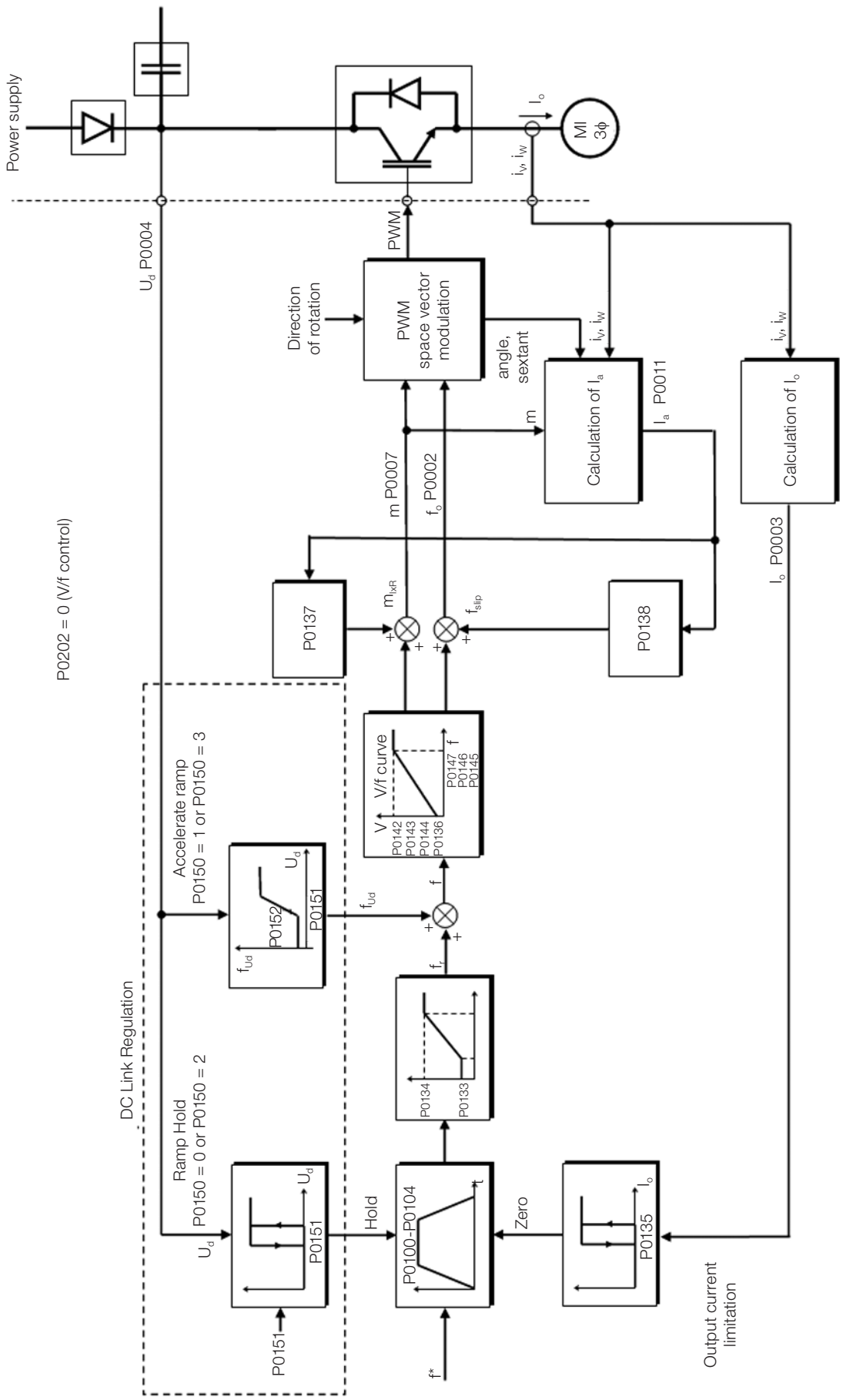

Figure 9.1: *Block diagram of V/f scale control*

9.1 PARAMETERIZATION OF THE V/f SCALAR CONTROL

The scalar control is the inverter factory default control mode for its popularity and because it meets most applications of the market. However, parameter P0202 allows the selection of other options for the control mode, as per Chapter 8 AVAILABLE MOTOR CONTROL TYPES on page 8-1.

The V/f curve is completely adjustable in five different points as shown in Figure 9.2 on page 9-3, although the factory default defines a preset curve for motors 50 Hz or 60 Hz, as per options of P0204. In this format, point P_0 defines the amplitude applied at 0 Hz, while P_3 defines the rated amplitude and frequency and beginning of field weakening. Intermediate points P_1 and P_2 allow the setting of the curve for a non-linear relationship between torque and speed, for instance, in fans where the load torque is quadratic in relation to the speed. The field weakening region is determined between P_3 and P_4, where the amplitude is maintained in 100 %.

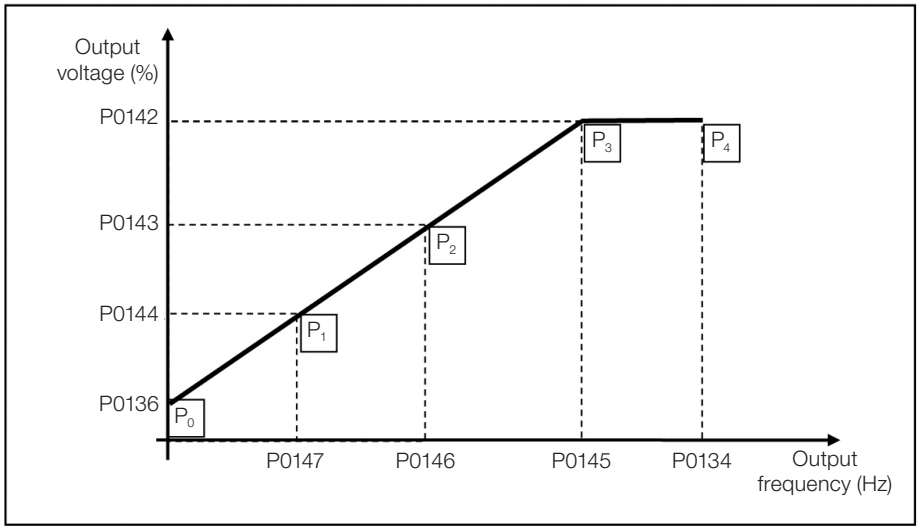

Figure 9.2: *Curve V/f*

The CFW500 factory default settings define a linear relationship of the torque with the speed, overlapping points P1, P2 and P3 at 50 Hz or 60 Hz; refer to the description of P0204. In this way, V/f curve is a straight line F defined by just two points, P0136 which is the constant term or voltage in 0 Hz and the rated frequency and voltage operation point (50 Hz or 60 Hz and 100 % of maximum output voltage).

The points $\mathbf{P_0}$[P0136, 0 Hz], $\mathbf{P_1}$[P0144, P0147], $\mathbf{P_2}$[P0143, P0146], $\mathbf{P_3}$[P0142, P0145] and $\mathbf{P_4}$[100 %, P0134] can be adjusted so that the voltage and frequency relationship imposed to the output approximates the ideal curve for the load. Therefore, for loads in which the torque behavior is quadratic in relation to the speed, such as in centrifugal pumps and fans, the points of the curve can be adjusted so energy saving is obtained.

NOTE!
A V/f quadratic curve can be approximated by: P0136 = 0; P0144 = 11.1 % and P0143 = 44.4 %.

NOTE!
If P0147 ≥ P0146 or P0146 ≥ P0145 or the V/f curve results in a segment with slope (rate) above 10 % / Hz, CONFIG (CONF) status is activated.

NOTE!
In frequencies below 0.1 Hz, the output PWM pulses are cut, except when the inverter is in DC Braking mode.

P0136 – Manual Torque Boost

Adjustable Range:	0.0 to 30.0 %	**Factory Setting:**	According to inverter model
Properties:	V/f, VVW PM		
Access Groups via HMI:	BASIC, MOTOR		

Description:

This parameter actuates in low speeds, that is, in the range from 0 Hz to P0147, increasing the inverter output voltage to compensate the voltage drop in the motor stator resistance so as to keep the torque constant.

The optimum setting is the smallest value of P0136 which allows the motor satisfactory start. A value greater than necessary will excessively increase the motor current at low speeds, which may lead the inverter to a fault condition (F0048, F0051 or F0070) or alarm condition (A0046, A0047 or A0050), as well as motor overheating. Figure 9.3 on page 9-4 shows the region of actuation of the Torque Boost between points P_0 and P_1.

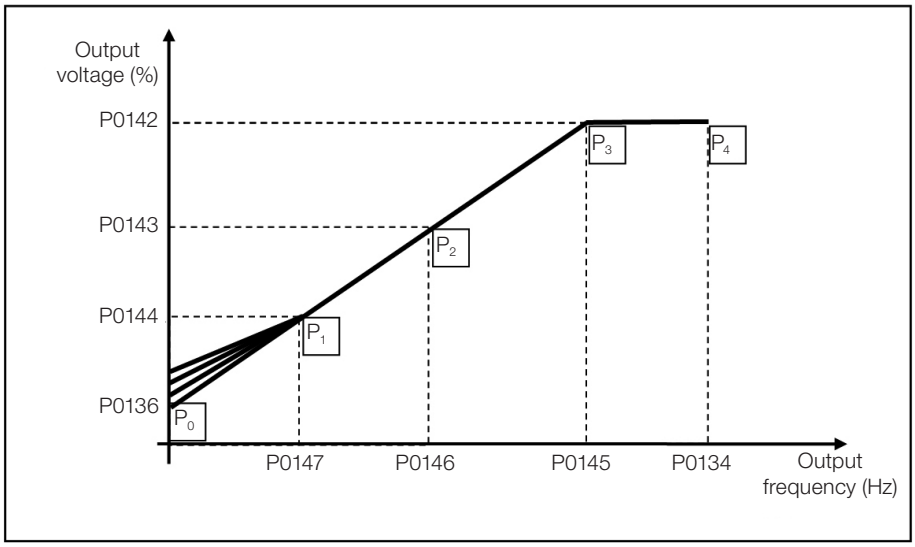

Figure 9.3: *Torque boost region*

P0142 – Maximum Output Voltage

P0143 – Intermediate Output Voltage

P0144 – Minimum Output Voltage

Adjustable Range:	0.0 to 100.0 %	**Factory Setting:**	P0142 = 100.0 % P0143 = 66.7 % P0144 = 33.3 %
Properties:	cfg, V/f, VVW PM		
Access Groups via HMI:			

Description:

These parameters allow adjusting the inverter V/f curve together with its orderly pairs P0145, P0146 and P0147.

NOTE!
In the V/f scalar mode, parameter P0178 allows the voltage regulation of the inverter output after defining the V/f curve. That could be useful in applications which require output voltage compensation or field weakening. In the VVW control mode, the behavior of P0178 changes and defines the rated flow only, which is connected to the intensity of the magnetic flux applied to the motor.

P0145 – Field Weakening Start Frequency

P0146 – Intermediate Output Frequency

P0147 – Low Output Frequency

Adjustable Range:	0.0 to 500.0 Hz	**Factory Setting:**	P0145 = 60.0 (50.0) Hz P0146 = 40.0 (33.3) Hz P0147 = 20.0 (16.7) Hz
Properties:	cfg, V/f, VVW PM		
Access Groups via HMI:			

Description:

These parameters allow adjusting the inverter V/f curve together with its orderly pairs P0142, P0143 and P0144.

The V/f curve is adjusted automatically in applications where the motor rated voltage is smaller than the power supply voltage, for instance, in a 440 V power supply with 380 V motor.

The adjustment of the V/f curve is necessary when a quadratic approximation is desired for energy saving in centrifugal pumps and fans, or in special applications: when a transformer is used between the inverter and the motor or the inverter is used as a power supply.

P0137 – Automatic Torque Boost

Adjustable Range:	0.0 to 30.0 %	**Factory Setting:**	0.0 %
Properties:	V/f		
Access Groups via HMI:	MOTOR		

Description:

The automatic torque boost compensates the voltage drop in the stator resistance because of active current. Look at Figure 9.1 on page 9-2, where variable $\mathbf{m_{IxR}}$ corresponds to the automatic torque boost action on the modulation index defined by V/f curve.

P0137 actuates similarly to P0136, but the value set is applied proportionally to the output active current in relation to the maximum current (2xP0295).

The setting criteria of P0137 are the same as those of P0136, that is, set the value as low as possible for the motor start and operation at low frequencies, because values above those increase the losses, heating and overload of the motor and inverter.

The block diagram of Figure 9.4 on page 9-6 shows the automatic compensation action IxR responsible for the increment of the voltage in the ramp output according to the increase of the active current.

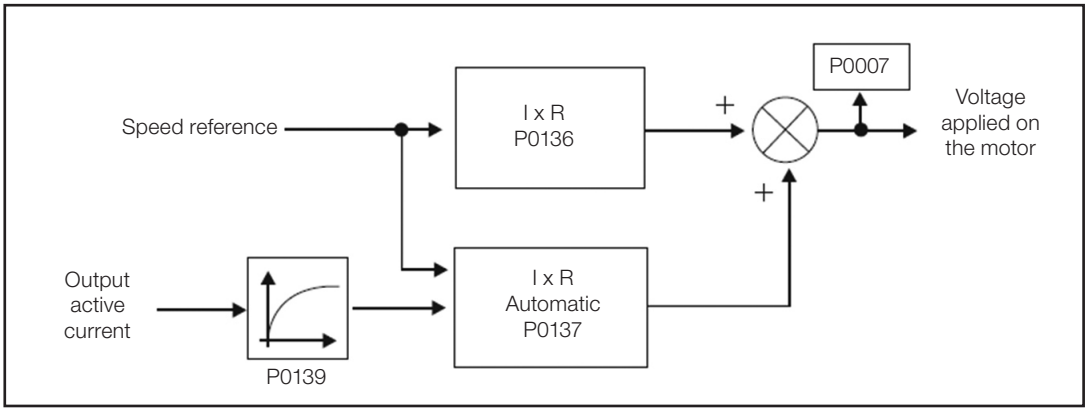

Figure 9.4: *Block diagram of the automatic torque boost*

P0138 – Slip Compensation

Adjustable Range:	-10.0 to 10.0 %	**Factory Setting:**	0.0 %
Properties:	V/f		
Access Groups via HMI:	MOTOR		

Description:

Parameter P0138 is used in the motor slip compensation function, when set for positive values. In this case, it compensates the speed drop due to application of the load on the shaft and, consequently, the slip. In this way, it increments the output frequency (Δf) considering the increase of the motor active current as shown in Figure 9.5 on page 9-6. In Figure 9.1 on page 9-2 this compensation is represented in the variable $\mathbf{f_{Slip}}$.

The setting in P0138 allows regulating with good accuracy the slip compensation by moving the operation point on the V/f curve, as shown in Figure 9.5 on page 9-6. Once P0138 is set, the inverter is able to keep the speed constant even with load variations.

Negative values are used in special applications where you wish to reduce the output speed considering the increase of the motor current.

E.g.: load distribution in motors driven in parallel.

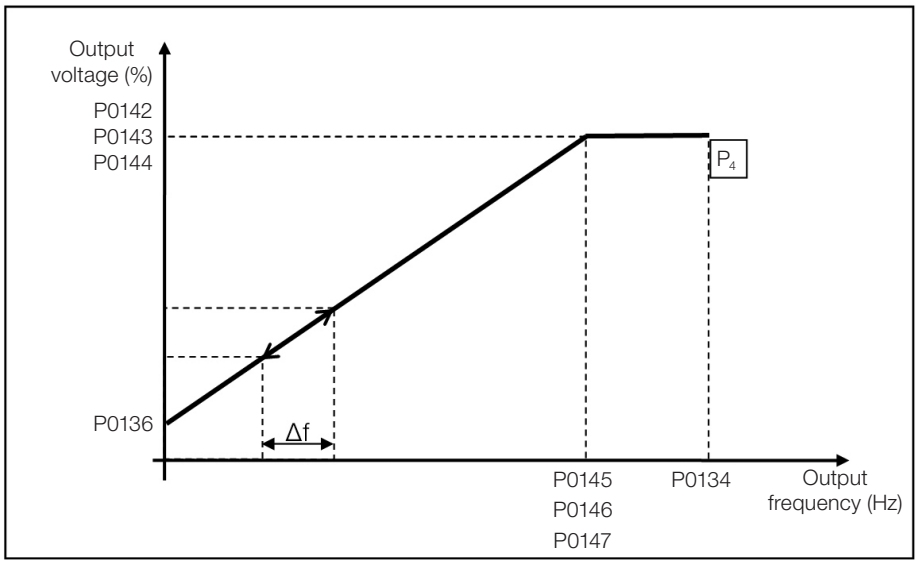

Figure 9.5: *Slip compensation in an operation point of the standar V/f curve*

9.2 START-UP IN V/f MODE

NOTE!
Read chapter 3 Installation and Connection of the CFW500 user's manual before installing, powering up or operating the inverter.

Sequence for installation, verification, power up and start-up.

1. Install the inverter: according to chapter 3 Installation and Connection of the CFW500 user's manual, making all the power and control connections.

2. Prepare and power up the inverter according to section 3.2 Electrical Installation of the user's manual of the CFW500.

3. Load the factory default with P0204 = 5 (60 Hz) or P0204 = 6 (50 Hz), according to the input rated frequency (power supply) of the inverter used.

4. Use the "Oriented Start-up" with P0317 = 1 to configure the main parameters of the V/f mode (P0202 = 0). The CFW500 user's manual shows the screen sequence of the "Oriented Start-up" of the V/f scalar control.

5. Following the "Oriented Start-up", set the rated values of the motor service factor (P0398), voltage (P0400), current (P0401), frequency (P0403), speed (P0402) and power (P0404). In addition to those parameters, P0406 defines the motor ventilation type for automatic setting of P0156, P0157 and P0158, according to Table 12.3 on page 12-12.

6. Parameter P0407 allows the setting of the motor power factor used in the EOC function; see Section 9.4 ENERGY SAVING on page 9-12.

7. Setting parameter P0408 = 1 activates the self-tuning of the motor stator resistance in P0409. The correct setting of P0409 can improve the DC braking torque; see Section 13.5 DC BRAKING on page 13-11.

8. In order to set a V/f curve different from the default, set the V/f curve using parameters P0136 to P0147.

9. Setting of specific parameters and functions for the application: program the digital and analog inputs and outputs, HMI keys, etc., according to the application requirements.

For further details about the self-tuning of parameter P0409, see Item 12.7.5 Self-Tuning on page 12-20 of this manual.

For applications:

- Simple applications that can use the factory default programming of the analog and digital inputs and outputs, use the HMI "BASIC" menu.

- Applications that require just the analog and digital inputs and outputs with programming different from the factory default, use the HMI "I/O" menu.

- Applications that require functions such as Flying Start, Ride-Through, DC Braking, Rheostatic Braking, etc., access and modify the parameter of those functions in the HMI "PARAM" menu.

9.3 DC LINK VOLTAGE AND OUTPUT CURRENT LIMITATION

The DC Link voltage and output current limitation are protection functions of the inverter which act on the ramp control according to the P0150 options, aiming at containing the rise of voltage on the DC Link and of the output current. In this way, the following of the reference by the ramp is blocked and the output speed follows the 3rd Ramp for P0133 or P0134.

When the DC Link voltage is too high, the inverter may freeze (hold) the deceleration ramp or increase the output speed in order to contain this voltage. On the other hand, when the output current is too high, the inverter may decelerate or freeze (hold) the acceleration ramp in order to reduce this current. Those actions prevent the occurrence of faults F0022 and F0070, respectively.

Both protections normally occur at different moments of the inverter operation, but in case of occurrence at the same time, by definition, the DC Link limitation has higher priority than the output current limitation.

There are two modes to limit the DC Link voltage during the motor braking: "Ramp Holding" (P0150 = 0 or 2) and "Accelerate Ramp" (P0150 = 1 or 3). Both actuate limiting the braking torque and power, so as to prevent the shutting down of the inverter by overvoltage (F0022). This situation often occurs when a load with high moment of inertia is decelerated or when short deceleration time is programmed.

NOTE!
The inverter protection functions use the 3rd Ramp defined by P0106 for both acceleration and deceleration.

9.3.1 DC Link Voltage Limitation by "Ramp Hold" P0150 = 0 or 2

- It has effect during deceleration only.
- Actuation: when the DC Link voltage reaches the level set in P0151, a command is set to the "ramp" block, which inhibits the motor speed variation according to Figure 9.1 on page 9-2 and Figure 10.1 on page 10-2.
- Use recommended in the drive of loads with high moment of inertia referred to the motor shaft or loads that require short deceleration ramps.

9.3.2 DC Link Voltage Limitation by "Accelerate Ramp" P0150 = 1 or 3

- It has effect in any situation, regardless the motor speed condition: accelerating, decelerating or constant speed.
- Actuation: the DC Link voltage is measured (P0004) and compared to the value set in P0151; the difference between those signals (error) is multiplied by the proportional gain (P0152); the result is then added to the ramp output, as per Figure 9.8 on page 9-10 and Figure 9.10 on page 9-12.
- Use recommended in the drive of loads that require braking torques at constant speed situation in the inverter output. For example, drive of loads with eccentric shaft as in sucker rod pumps; another application is the load handling with balance like in the translation in overhead cranes.

NOTE!
When using Rheostatic Braking, the function "Ramp Hold" or "Accelerate Ramp" must be disabled. Refer to description of P0151.

P0150 – Type DC V/f Link Regulator

Adjustable Range:	0 = hold_Ud and decel_LC 1 = accel_Ud and decel_LC 2 = hold_Ud and hold_LC 3 = accel_Ud and hold_LC	**Factory Setting:**	0
Properties:	cfg, V/f, VVW		
Access Groups via HMI:	MOTOR		

Description:

P0150 configures the behavior of the ramp for the limitation functions of the DC Link Voltage and Current Limitation. In those cases, the ramp ignores the reference and takes an action of accelerating (accel), decelerating (decel) or freezing (hold) the normal path of the ramp. That occurs because of the limit pre-defined in P0151 and P0135 for the DC Link (Ud) Limitation and for Current (LC) Limitation, respectively.

P0151 – DC Link Regulation Level

Adjustable Range:	339 to 1200 V	**Factory Setting:**	400 V (P0296 = 0) 800 V (P0296 = 1) 800 V (P0296 = 2) 800 V (P0296 = 3) 800 V (P0296 = 4) 800 V (P0296 = 5) 1000 V (P0296 = 6) 1000 V (P0296 = 7)
Properties:	V/f, VVW, VVW PM		
Access Groups via HMI:			

Description:

Voltage level to activate the DC Link voltage regulation.

> **NOTE!**
> The DC Link regulation level for the VVW PM control is performed by ramp hold when the motor is decelerating.

P0152 – Gain Proportional to the DC Link Voltage Regulator

Adjustable Range:	0.00 to 9.99	**Factory Setting:**	1.50
Properties:	V/f, VVW, VVW PM		
Access Groups via HMI:			

Description:

Gain proportional to the DC Link voltage regulator.

When the option of P0150 is 1 or 3, the value of P0152 is multiplied by the DC Link voltage "error", that is, error = current DC Link voltage – P0151. The result is directly added to the inverter output frequency in Hz. This resource is normally used to prevent overvoltage in applications with eccentric loads.

Figure 9.6 on page 9-10 to Figure 9.9 on page 9-10 show the block diagrams and example graphs.

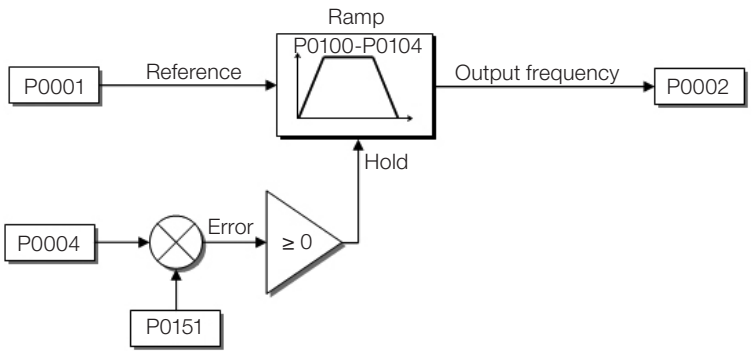

Figure 9.6: *Block diagram DC Link voltage limitation – Ramp Hold*

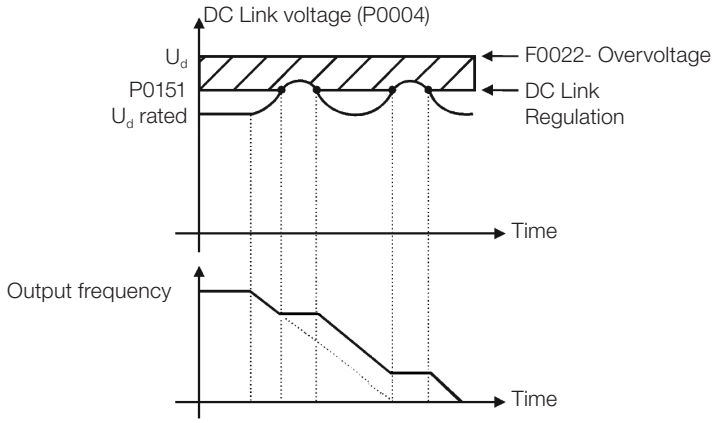

Figure 9.7: *Example graph of DC Link voltage limitation – Ramp Hold*

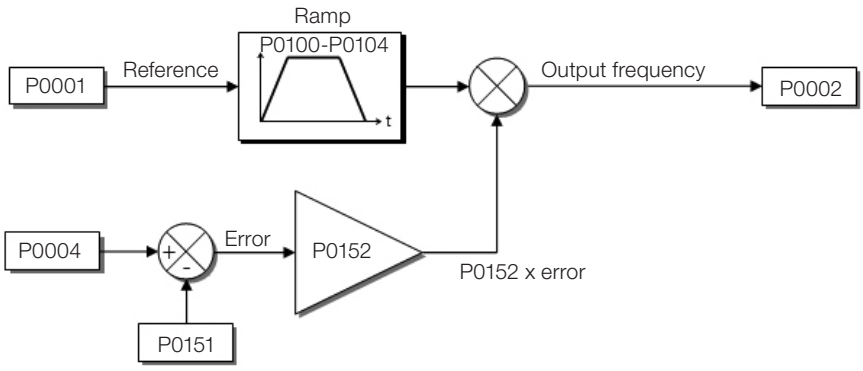

Figure 9.8: *Block diagram of DC Link voltage limitation – Accelerate Ramp*

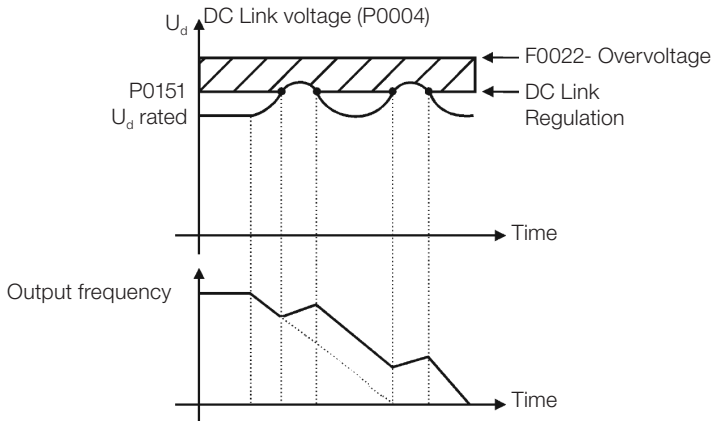

Figure 9.9: *Example graph of the DC Link voltage limitation – Accelerate Ramp*

Like in the DC Link voltage regulation, the output current regulation also has two operating modes: "Ramp Holding" (P0150 = 2 or 3) and "Decelerate Ramp" (P0150 = 0 or 1). Both actuate limiting the torque and power delivered to the motor, so as to prevent the shutting down of the inverter by overcurrent (F0070). This situation often occurs when a load with high moment of inertia is accelerated or when short acceleration time is programmed.

9.3.3 Output Current Limitation by "Ramp Hold" P0150 = 2 or 3

- It prevents the motor from collapsing during torque overload in the acceleration or deceleration.
- Actuation: if the motor current exceeds the value set in P0135 during acceleration or deceleration, the speed will not be incremented (acceleration) or decremented (deceleration). When the motor current reaches a value below P0135, the motor accelerates or decelerates again. Refer to Figure 9.10 on page 9-12.
- It has a faster action than the "Decelerate Ramp" mode.
- It acts in the motorization and regeneration modes.

9.3.4 Current Limitation Type "Decelerate Ramp" P0150 = 0 or 1

- It prevents the motor from collapsing during torque overload in the acceleration or constant speed.
- Actuation: if the motor current exceeds the value set in P0135, a null value is forced for the speed ramp input forcing the motor deceleration. When the motor current reaches a value below P0135, the motor accelerates again. Look at Figure 9.10 on page 9-12.

P0135 – Maximum Output Current

Adjustable Range:	0.0 to 200.0 A	**Factory Setting:**	1.5 x I_{nom}
Properties:	V/f, VVW, VVW PM		
Access Groups via HMI:	BASIC, MOTOR		

Description:

Current level to activate the current limitation for the Ramp Hold and Decelerate Ramp modes, as per Figure 9.10 on page 9-12, respectively.

NOTE!
For the VVW PM control, the output current limitation works in the Ramp Hold mode if the motor is accelerating. If the motor is in current limitation and not accelerating, the motor speed decreases according to the load size.
For VVW PM control, the motor current limitation value after the Oriented Start-Up is 1.5 x P0401.

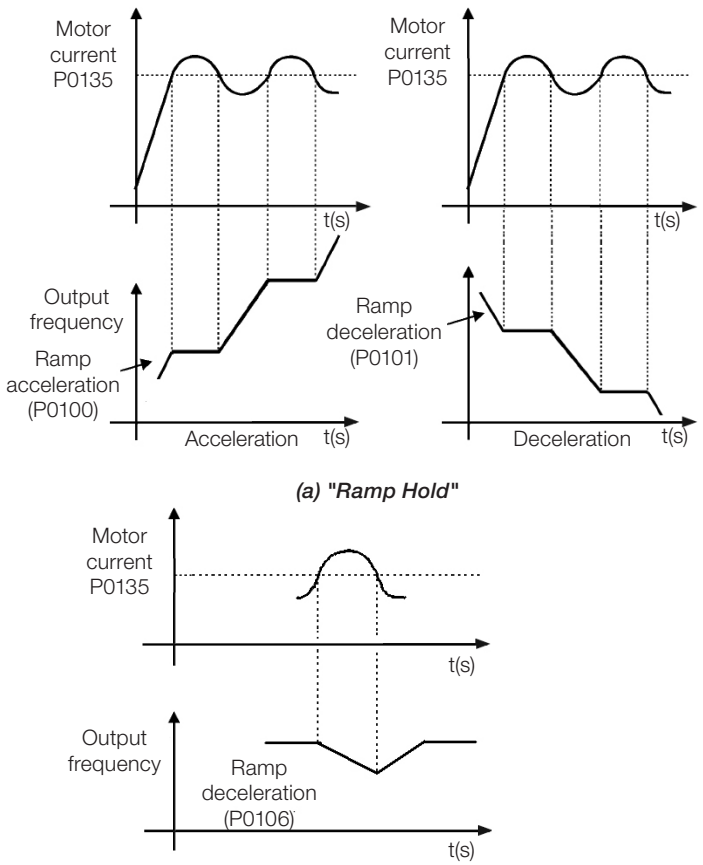

Figure 9.10: *(a) and (b) Actuation modes of Current Limitation via P0135*

9.4 ENERGY SAVING

The efficiency of a machine is defined as being the ratio between the output mechanical power and the input electrical power. Remember that the mechanical power is the product between torque and rotor speed, and that the input electric power is the sum of the output mechanical power and the motor losses.

In the case of the three-phase induction motor, the optimized efficiency is achieved with ¾ of the rated load. In the region below this point, the Energy Saving function has its best performance.

The Energy Saving function acts directly on the voltage applied at the inverter output; thus, the flux relationship delivered to the motor is changed so as to reduce the motor losses and enhance the efficiency, consequently reducing consumption and noise.

The function is active when the load is below the maximum value (P0588) and the speed is above the minimum value (P0590). In addition, in order to prevent the stalling of the motor, the applied voltage is limited to a minimum acceptable value (P0589). The parameter group presented in the sequence defines those and other characteristics necessary for the energy saving function.

P0407 – Motor Rated Power Factor

Adjustable Range:	0.50 to 0.99	**Factory Setting:**	0.80
Properties:	cfg, V/f, VVW		
Access Groups via HMI:	MOTOR, STARTUP		

Description:

Setting of the motor rated power factor.

In order to obtain the proper operation of the energy saving function, the motor power factor must be correctly set, according to the information on the motor nameplate.

Note:
With the motor nameplate data and for applications with constant torque, the motor optimum efficiency is normally obtained with the energy saving function active. In some cases, the output current may increase, and then it is necessary to gradually reduce the value of this parameter to the point in which the current value remains equal to or below the current value obtained with the function disabled.

For information regarding the actuation of P0407 in the VVW control mode, refer to Section 10.1 VVW CONTROL PARAMETERIZATION on page 10-3.

P0588 – Maximum Torque Level

Adjustable Range:	0 to 85 %	**Factory Setting:**	0 %
Properties:	V/f, VVW		
Access Groups via HMI:	MOTOR, NET		

Description:
This parameter defines the torque value to activate the operation of the energy saving function.

Setting this parameter to zero disables the function.

It is recommended to set this parameter to 60 %, but it has to be set according the application requirement.

P0589 – Level of Minimum Applied Voltage

Adjustable Range:	8 to 40 %	**Factory Setting:**	40 %
Properties:	V/f, VVW		
Access Groups via HMI:	MOTOR, NET		

Description:
This parameter defines the minimum voltage value that will be applied to the motor when the energy saving function is active. This minimum value is relative to the voltage imposed by the V/f curve for a certain speed.

P0590 – Minimum Speed Level

Adjustable Range:	360 to 18000 rpm	**Factory Setting:**	600 rpm 525 rpm
Properties:	V/f, VVW		
Access Groups via HMI:	MOTOR, NET		

Description:
This parameter defines the minimum speed value at which the energy saving function will remain active.

The hysteresis for the minimum speed level is of 2 Hz.

P0591 – Hysteresis for the Maximum Torque Level

Adjustable Range:	0 to 30 %	**Factory Setting:**	10 %
Properties:	V/f, VVW		
Access Groups via HMI:	MOTOR, NET		

Description:

Hysteresis used to activate and deactivate the energy saving function.

If the function is active and the output current oscillates, it is necessary to increase the value of the hysteresis.

NOTE!
It is not possible to set these parameters while the motor is spinning.

10 VVW CONTROL

The VVW control mode (Voltage Vector WEG) uses a control method with a much higher performance than the V/f control because of the load torque estimation and of the control of the magnetic flux in the air gap, as per scheme of Figure 10.1 on page 10-2. In this control strategy, losses, efficiency, rated slip and power factor of the motor are considered in order to improve the control performance.

The main advantage compared to the V/f control is the best speed regulation with greater torque capacity at low speeds (frequencies below 5 Hz), allowing a relevant improvement in the drive performance in permanent duty. Besides, the VVW control has a quick and simple setting and it is suitable for most medium-performance applications in the control of three-phase induction motor.

By just measuring the output current, the VVW control instantly obtains the motor torque and slip. Thus, the VVW actuates in the output voltage compensation and slip compensation. Therefore, the VVW controller action replaces the classical V/f functions in P0137 and P0138, but with a calculation model much more sophisticated and accurate, meeting several load conditions or operation points of the application.

In order to achieve a good speed regulation in permanent duty with a good operation of the VVW control, the parameter setting in the range P0399 to P0407 and the stator resistance in P0409 are essential. Those parameters can easily be obtained on the motor nameplate and in the self-tuning routine activated by P0408.

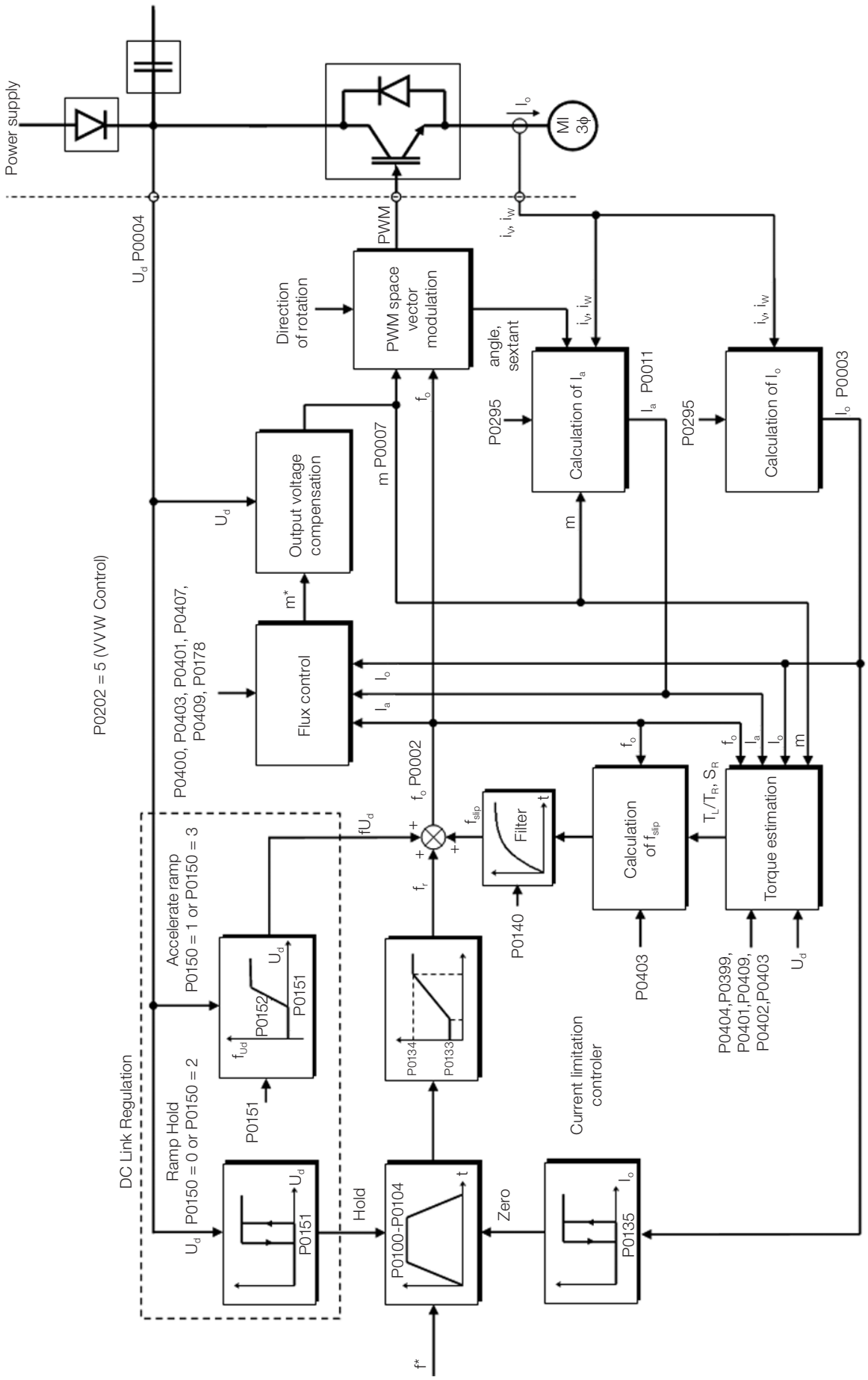

Figure 10.1: VVW control block diagram

10.1 VVW CONTROL PARAMETERIZATION

The VVW control mode is selected by parameter P0202, control mode selection, as described in Chapter 8 AVAILABLE MOTOR CONTROL TYPES on page 8-1.

Opposite to the V/f scalar control, the VVW control requires a series of data from the motor nameplate and a self-tuning for its proper operation. Besides, it is recommended that the driven motor match the inverter, that is, the motor and inverter power be as close as possible.

The VVW control setting process is simplified by the HMI "STARTUP" menu, where the relevant parameters for the configuration of the VVW are selected for browsing the HMI.

Below are described the parameters to configure the VVW control setting. This data is easily obtained on WEG standard motor nameplates, however in older motors or motors made by other manufacturers, the data may not be readily available. In those cases, it is recommended first contact the motor manufacturer, measure or calculate the desired parameter. As a last resort, the user always can make a relationship with Table 10.1 on page 10-4 and use the equivalent or approximate WEG standard motor parameter.

NOTE!
The correct setting of the parameters directly contributes to the VVW control performance.

Table 10.1: Characteristics of IV pole WEG standard motors

Power [P0404] (CV)	Power [P0404] (kW)	Frame	Voltage [P0400] (V)	Current [P0401]	Frequency [P0403] (Hz)	Speed [P0402] (rpm)	Efficiency [P399] (%)	Power Factor	Stator Resistance [P0409] (Ω)
0.16	0.12	63	220	0.85	60	1720	56.0	0.66	21.77
0.25	0.18	63		1.12		1720	64.0	0.66	14.87
0.33	0.25	63		1.42		1720	67.0	0.69	10.63
0.50	0.37	71		2.07		1720	68.0	0.69	7.37
0.75	0.55	71		2.90		1720	71.0	0.70	3.97
1.00	0.75	80		3.08		1730	78.0	0.82	4.13
1.50	1.10	80		4.78		1700	72.7	0.83	2.78
2.00	1.50	90S		6.47		1720	80.0	0.76	1.55
3.00	2.20	90L		8.57		1710	79.3	0.85	0.99
4.00	3.00	100L		11.6		1730	82.7	0.82	0.65
5.00	3.70	100L		13.8		1730	84.6	0.83	0.49
6.00	4.50	112M		16.3		1730	84.2	0.86	0.38
7.50	5.50	112M		20.0		1740	88.5	0.82	0.27
10.0	7.50	132S		26.6		1760	89.0	0.84	0.23
12.5	9.20	132M		33.0		1755	87.7	0.86	0.16
15.0	11.00	132M/L		37.6		1760	92.7	0.81	0.13
20.0	15.00	160M		51.4		1775	93.4	0.82	0.08
25.0	18.50	160L		63.8		1770	93.8	0.81	0.06
30.0	22.00	180M		74.0		1775	94.0	0.83	0.04
40.0	30.00	200M		99.2		1775	94.4	0.84	0.03
0.16	0.12	63	380	0.49	60	1720	56.0	0.66	65.30
0.25	0.18	63		0.65		1720	64.0	0.66	44.60
0.33	0.25	63		0.82		1720	67.0	0.69	31.90
0.50	0.37	71		1.20		1720	68.0	0.69	22.10
0.75	0.55	71		1.67		1720	71.0	0.70	11.90
1.00	0.75	80		1.78		1730	78.0	0.82	12.40
1.50	1.10	80		2.76		1700	72.7	0.83	8.35
2.00	1.50	90S		3.74		1720	80.0	0.76	4.65
3.00	2.20	90L		4.95		1710	79.3	0.85	2.97
4.00	3.00	100L		6.70		1730	82.7	0.82	1.96
5.00	3.70	100L		7.97		1730	84.6	0.83	1.47
6.00	4.50	112M		9.41		1730	84.2	0.86	1.15
7.50	5.50	112M		11.49		1740	88.5	0.82	0.82
10.0	7.50	132S		15.18		1760	89.0	0.84	0.68
12.5	9.20	132M		18.48		1755	87.7	0.86	0.47
15.0	11.0	132M/L		21.8		1760	92.4	0.83	0.34
20.0	15.0	160M		29.8		1775	93.4	0.82	0.23
25.0	18.50	160L		36.9		1770	93.8	0.81	0.18
30.0	22.00	180M		42.8		1775	94.0	0.83	0.12
40.0	30.00	200M		57.4		1775	94.4	0.84	0.09
50.0	37.00	200L		70.7		1775	94.6	0.84	0.08
0.16	0.12	63	230	0.73	50	1375	57.0	0.72	30.62
0.25	0.18	63		1.05		1360	58.0	0.74	20.31
0.33	0.25	71		1.4		1310	59.0	0.76	14.32
0.50	0.37	71		1.97		1320	62.0	0.76	7.27
0.75	0.55	80		2.48		1410	68.0	0.82	5.78
1.00	0.75	80		3.23		1395	72.0	0.81	4.28
1.50	1.10	90S		4.54		1420	77.0	0.79	2.58
2.00	1.50	90L		5.81		1410	79.0	0.82	1.69
3.00	2.20	100L		8.26		1410	81.5	0.82	0.98
4.00	3.00	100L		11.3		1400	82.6	0.81	0.58
5.00	3.70	112M		14.2		1440	85.0	0.83	0.43
7.50	5.50	132S		19.1		1450	86.0	0.84	0.25
10.0	7.50	132M		25.7		1455	87.0	0.84	0.14
15.0	11.00	160M		35.6		1460	91.0	0.84	0.16
20.0	15.00	160L		48.6		1460	91.0	0.85	0.10
25.0	18.50	180M		58.4		1465	91.6	0.83	0.06
30.0	20.00	180L		68.6		1465	92.3	0.85	0.05
40.0	30.00	200L		78.0		1465	92.8	0.83	0.03
0.16	0.12	63	400	0.42	50	1375	57.0	0.72	91.85
0.25	0.18	63		0.60		1360	58.0	0.74	60.94
0.33	0.25	71		0.80		1310	59.0	0.76	42.96
0.50	0.37	71		1.13		1320	62.0	0.76	21.81
0.75	0.55	80		1.42		1410	68.0	0.82	17.33
1.00	0.75	80		1.86		1395	72.0	0.81	12.85
1.50	1.10	90S		2.61		1420	77.0	0.79	7.73
2.00	1.50	90L		3.34		1410	79.0	0.82	5.06
3.00	2.20	100L		4.75		1410	81.5	0.82	2.95
4.00	3.00	100L		6.47		1400	82.6	0.81	1.75
5.00	3.70	112M		8.18		1440	85.0	0.83	1.29
7.50	5.50	132S		11.0		1450	86.0	0.84	0.76
10.0	7.50	132M		14.8		1455	87.0	0.84	0.61
15.0	11.0	160M		22.1		1455	88.5	0.81	0.35
20.0	15.0	160L		29.1		1460	89.7	0.83	0.24
25.0	18.5	180M		33.7		1455	91.0	0.87	0.18
30.0	22.0	180L		39.7		1455	91.0	0.88	0.14
40.0	30.0	200L		57.4		1455	92.8	0.83	0.10
50.0	37.00	225S/M		70.7		1455	93.2	0.83	0.08

P0178 – Rated Flux

Adjustable Range:	0.0 to 150.0 %	**Factory Setting:**	100.0 %
Properties:			
Access Groups via HMI:			

Description:

It defines the desired flux in the motor air gap in percentage (%) of the rated flux. In general, it is not necessary to modify the value of P0178 of the standard value of 100 %. However, some specific situations may use values slightly above to increase the torque, or below to reduce the energy consumption.

NOTE!
Exclusively in the V/f scalar control mode, parameter P0178 allows the adjustment of the output voltage after defining the V/f curve. That could be useful for output voltage compensation or field weakening.

P0398 - Motor Service Factor

Adjustable Range:	1.00 to 1.50	**Factory Setting:**	1.00
Properties:	cfg		
Access Groups via HMI:	MOTOR, STARTUP		

Description:

It is the continuous overload capability, i.e., a reserve of power that gives the motor the capability to withstand working in adverse conditions.

Set it according to the value informed on the motor nameplate.

It affects the motor overload protection.

P0399 – Motor Rated Efficiency

Adjustable Range:	50.0 to 99.9 %	**Factory Setting:**	75.0 %
Properties:	cfg, VVW		
Access Groups via HMI:	MOTOR, STARTUP		

Description:

This parameter is important for the precise operation of the VVW control. A misconfiguration will cause incorrect calculation of the slip compensation, reducing the performance of the speed control.

P0400 – Motor Rated Voltage

P0401 – Motor Rated Current

P0402 – Motor Rated Speed

P0403 – Motor Rated Frequency

P0404 – Motor Rated Power

P0406 – Motor Ventilation

Refer to the Section 12.6 MOTOR DATA on page 12-9, for more information.

P0407 – Motor Rated Power Factor

Adjustable Range:	0.50 to 0.99	**Factory Setting:**	0.80
Properties:	cfg, V/f, VVW		
Access Groups via HMI:	MOTOR, STARTUP		

Description:

The setting of parameters P0398, P0399, P0400, P0401, P0402, P0403, P0404 and P0407 must be according to the data on the nameplate of the motor used, taking into account the motor voltage.

P0408 – Self-Tuning

P0409 – Stator Resistance

Self-Tuning function parameters. Refer to Item 12.7.5 Self-Tuning on page 12-20.

10.2 START-UP IN VVW MODE

NOTE!
Read chapter 3 Installation and Connection of the CFW500 user's manual before installing, powering up or operating the inverter.

Sequence for installation, verification, power up and start-up.

1. Install the inverter according to chapter 3 Installation and Connection of the CFW500 user's manual, making all the power and control connections.

2. Prepare and power up the inverter according to section 3.2 Electrical Installation of the CFW500 user's manual.

3. Load the correct factory default in P0204 based on the motor rated frequency (set P0204 = 5 for 60 Hz motors and P0204 = 6 for 50 Hz motors).

4. Program the digital and analog inputs and outputs, HMI keys, etc., according to the application requirements.

5. Activation of the VVW control: Access parameter P0317 and activate the "oriented start-up" by setting it to 1. This parameter can be more easily accessed in the "STARTUP" menu of the HMI.

6. Parameterization of the VVW control: browsing the "STARTUP" menu, set parameters P0398, P0399, P0400, P0401, P0402, P0403, P0404 and P0407 according to the data on the motor nameplate. If some of those data are not available, insert the approximate value by calculation or similarity to WEG standard motor – see Table 10.1 on page 10-4.

7. Self-Tuning of the VVW control: The self-tuning is activated by setting P0408 = 1. In this process, the inverter applies DC to the motor to measure the stator resistance, while the HMI bar graph shows the progress of the self-tuning. The self-tuning process can be interrupted at any time by pressing the "O" key.

8. End of the Self-Tuning: at end of the self-tuning, the HMI returns to the browsing menu, the bar displays the parameter programmed by P0207 again and the stator resistance measured is stored in P0409. On the other hand, if the self-tuning fails, the inverter will indicate a fault. The most common fault in this case is F0033, which indicates error in the estimated stator resistance. Refer to Chapter 17 FAULTS AND ALARMS on page 17-1.

For applications:

- That can use the factory default programming of the analog and digital inputs and outputs, use the HMI "BASIC" menu.
- That require just the analog and digital inputs and outputs with programming different from the factory default, use the HMI "I/O" menu.
- That require functions such as Flying Start, Ride-Through, DC Braking, Rheostatic Braking, etc., access and modify the parameter of those functions in the HMI "PARAM" menu. For further information on the HMI menus, refer to Chapter 5 PROGRAMMING BASIC INSTRUCTIONS on page 5-1.

For better visualization of the start-up in the VVW mode, check Figure 10.2 on page 10-8, below:

Step	Action/Indication on the Display	Step	Action/Indication on the Display
1	 ■ Monitoring mode ■ Press the **ENTER/MENU** key to enter the 1st level of the programming mode	2	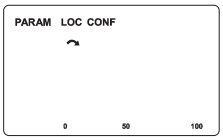 ■ The **PARAM** group is selected; press the ▲ or ▼ key until selecting the **STARTUP** group
3	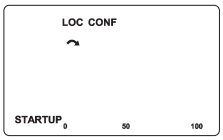 ■ When the **STARTUP** group is selected, press the **ENTER/MENU** key	4	 ■ The parameter "**P0317 – Oriented Start-up**" is then selected, press the **ENTER/MENU** to get into the parameter content
5	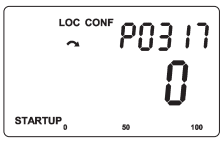 ■ Change the parameter P0317 to **"1 - Yes",** by using the ▲ key	6	 ■ Press **ENTER/MENU** and with the ▲ and ▼ keys set the value 5, which activates VVW control mode
7	 ■ Press **ENTER/MENU** to save the modification of P0202	8	 ■ Press the ▲ key to proceed with the Startup of the VVW
9	 ■ If necessary, change **"P0296 - Line Rated Voltage".** This change will affect P0151, P0153, P0185, P0321, P0322, P0323 and P0400, or press the ▲ key for the next parameter	10	 ■ If necessary, change **"P0398 - Motor Service Factor"** parameter. This change will affect the current and the time of the motor overload protection operation, or press the ▲ key for the next parameter

Step	Action/Indication on the Display	Step	Action/Indication on the Display
11	 ■ If necessary, modify the content of **"P0399 – Motor Rated Efficiency"**, or press the ▲ key for the next parameter	12	 ■ If necessary, modify the content of **"P0400 – Motor Rated Voltage"**, or press the ▲ key for the next parameter
13	 ■ If necessary, modify the content of **"P0401 – Motor Rated Current"**, or press the ▲ key for the next parameter	14	 ■ If necessary, modify the content of **"P0403 – Motor Rated Frequency"**, or press the ▲ key for the next parameter
15	 ■ If necessary, modify the content of **"P0402 – Motor Rated Speed"**, or press the ▲ key for the next parameter	16	 ■ If necessary, modify the content of **"P0404 – Motor Rated Power"**, or press the ▲ key for the next parameter
17	 ■ If necessary, change **"P0406 - Motor Ventilation"** parameter, or press the ▲ key for the next parameter	18	 ■ If necessary, modify the content of **"P0407 – Motor Rated Power Factor"**, or press the ▲ key for the next parameter
19	 ■ At this point, the HMI shows the option to do the Selftuning. Whenever possible, execute the Self-tuning. To activate the Self-tuning, change the value of P0408 to **"1"** ■ The keypad will show **"CONF"** and **"RUN"** status simultaneously during the self-tunning. The **"RUN"** status is automatically off and parameter P0408 is automatically set back to zero ■ Press the ▲ key for the next parameter	20	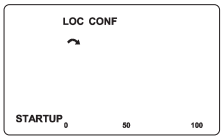 ■ To exit the **STARTUP** menu, just press **BACK/ESC**
21	 ■ By means of the ▲ and ▼ keys, select the desired menu or press **BACK/ESC** again to return directly to the HMI monitoring mode		

Figure 10.2: *Start-up of the VVW mode*

11 VVW PM CONTROL

The VVW PM (Voltage Vector WEG for Permanent Magnet) control mode uses a control method based on the voltage-oriented vector control technique for permanent magnet motors with good performance for slow dynamics systems. This control is user friendly and provides high performance – reducing losses and saving energy – due to the tracking of the maximum torque per ampere and the maintainability of current stability, according to the scheme of Figure 11.1 on page 11-2. Therefore, this strategy eliminates two problems inherent to permanent magnet synchronous motors:

- Instability with oscillatory responses in their electrical variables or loss of synchronism after changes in the load and/or speed reference.
- Excessive current for load application.

In this control strategy no self-tuning is required; however, to achieve a good adjustment, the motor nameplate data must be entered into the oriented STARTUP.

This type of control is ideal for medium and high-speed applications which do not require a fast dynamic response, focused on energy efficiency such as the driving of:

- Fans.
- Pumps.
- Compressors.

On the other hand, the VVW PM is not recommended for applications requiring fast dynamic response or precise torque control, focused on dynamic performance such as:

- Dynamometers.
- Cargo handling (such as overhead cranes, hoists, elevators).
- Applications requiring performance similar to servomotors, such as CNC machines and machine tools (positioning and high dynamics required).

NOTE!
The motor rated current must be higher than 1/3 of the inverter rated current.

NOTE!
VVW PM control is not supported by frame A CFW500. When setting P0202 = 8 on a frame A inverter, it goes into the CONFIG state.

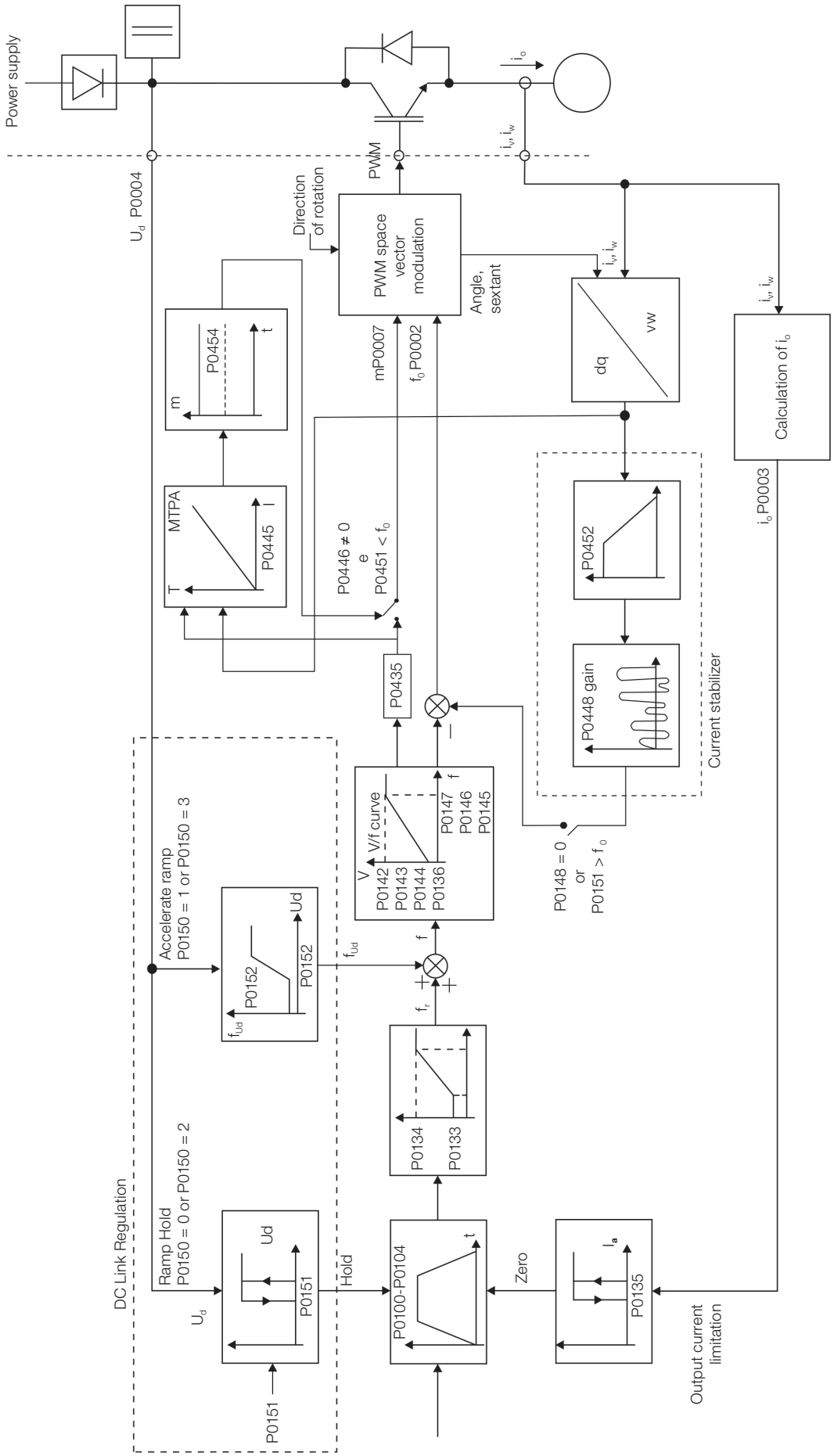

Figure 11.1: VVW PM control block diagram

11.1 PARAMETER SETTING OF THE VVW PM CONTROL

The VVW PM control mode is selected at parameter P0202, control mode selection, as described in Chapter 8 AVAILABLE MOTOR CONTROL TYPES on page 8-1.

The VVW PM control just requires the motor nameplate data for its proper operation. In addition, it is recommended that the driven motor match the inverter, that is, the motor and inverter power should be as close as possible.

The setting of the VVW PM control is simplified by the HMI STARTUP menu, where the relevant parameters for the VVW PM configuration are selected to navigate the HMI.

The configuration and setting parameters of the VVW PM control are described here. This information is obtained on the WEG motor nameplate.

P0398 - Motor Service Factor

P0400 - Motor Rated Voltage

P0401 - Motor Rated Current

P0402 - Motor Rated Speed

P0404 - Motor Rated Power

P0406 - Motor Cooling

For further details, see Section 12.6 MOTOR DATA on page 12-9.

P0407 - Motor Rated Power Factor

For further details, see Section 10.1 VVW CONTROL PARAMETERIZATION on page 10-3.

P0431 - Number of Poles

Adjustable Range:	2 to 24	**Factory Setting:**	6
Properties:	cfg, VVW PM		
Access Groups via HMI:	STARTUP		

Description:

It sets the number of motor poles.

NOTE!
If this parameter is set to zero or an odd number, the drive will remain in config.

P0435 - Electromotive Constant Ke

Adjustable Range:	0 to 6000 $\frac{V}{kRPM}$	**Factory Setting:**	0
Properties:	VVW PM		
Access Groups via HMI:	STARTUP		

Description:

It sets the magnet induced RMS line voltage as a function of the motor speed. For example:

P0435 = 100 $\frac{V}{kRPM}$. Therefore, if the motor is at 1000 RPM, the voltage induced by the motor will be 100 V.

If P0435 = 0, the considered $\frac{V}{kRPM}$ ratio will be 1000 x $\frac{P0400}{P0402}$.

11.2 START-UP

NOTE!
Read Chapter 3 Installation and Connection of the CFW500 User's Manual before installing, energizing or operating the inverter.

Sequence for installation, inspection, energization and start-up:

1. Install the inverter according to Chapter 3 Installation and Connection of the user's manual, making all the power and control connections.
2. Prepare the drive and energize the inverter according to Section 3.2 Electrical Installation of the user's manual.
3. Load the factory default at P0204 = 5.
4. Setting of parameters and specific functions for the application: set the digital and analog inputs and outputs, HMI keys, etc., according to the application requirements.
5. Activation of the VVW PM control: Go to parameter P0317 and activate the "oriented start-up" by setting it to 1. This parameter can be more easily accessed via the HMI "STARTUP" menu.
6. VVW control parameter setting: navigating the STARTUP menu, set parameters P0398, P0400, P0401, P0402, P0431, P0435, P0404 e P0407 according to the motor nameplate data.

For applications:

- Which require just the analog and digital inputs and outputs with programming different from the factory default, use the HMI I/O menu.
- Which require to adjust functions such as Current Stabilizer, MTPA setting, access and modify the parameters of these functions through the HMI MOTOR menu. For further information on the HMI menus, refer to Chapter 5 PROGRAMMING BASIC INSTRUCTIONS on page 5-1.

For a better view of the start-up in the VVW PM mode, see Figure 11.2 on page 11-6:

Step	Action/Indication on the Display	Step	Action/Indication on the Display
1	 ■ Monitoring mode ■ Press the **ENTER/MENU** key to enter the 1st level of the programming mode	2	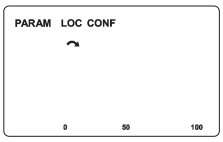 ■ The **PARAM** group is selected; press the ▲ or ▼ key until selecting the **STARTUP** group
3	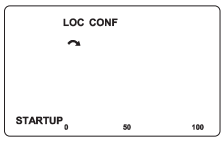 ■ When the **STARTUP** group is selected, press the **ENTER/MENU** key	4	 ■ The parameter **"P0317 – Oriented Start-up"** is then selected, press the **ENTER/MENU** to get into the parameter content
5	 ■ Change the parameter P0317 to "1 - Yes", by using the ▲ key	6	 ■ Press **ENTER/MENU** and with the ▲ and ▼ keys set the value 5, which activates VVW control mode
7	 ■ Press **ENTER/MENU** to save the modification of P0202	8	 ■ Press the ▲ key to proceed with the Startup of the VVW
9	 ■ If necessary, change **"P0296 - Line Rated Voltage"**. This change will affect P0151, P0153, P0185, P0321, P0322, P0323 and P0400, or press the ▲ key for the next parameter	10	 ■ If necessary, change **"P0398 - Motor Service Factor"** parameter. This change will affect the current and the time of the motor overload protection operation, or press the ▲ key for the next parameter
11	 ■ If necessary, modify the content of **"P0400 – Motor Rated Voltage"**, or press the ▲ key for the next parameter	12	 ■ If necessary, modify the content of **"P0401 – Motor Rated Current"**, or press the ▲ key for the next parameter
13	 ■ If necessary, modify the content of **"P0431 - Number of Motor Poles"**, or press the ▲ key for the next parameter	14	 ■ If necessary, modify the content of **"P0402 – Motor Rated Speed"**, or press the ▲ key for the next parameter
15	 ■ If necessary, modify the content of **"P0435 - Electromotive Constant"**, or press the ▼ key for the next parameter	16	 ■ If necessary, change **"P0404 - Motor Rated Power"** parameter, or press the ▲ key for the next parameter

Step	Action/Indication on the Display	Step	Action/Indication on the Display
17	 ■ If necessary, modify the content of **"P0406 - Motor Coolingor"** press the ▲ key for the next parameter	18	 ■ If necessary, change the content of **"P0407 - Motor Rated Power Factor"** or press the ▲ key for the next parameter
19	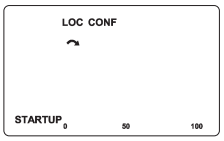 ■ To exit the **STARTUP** menu, just press **BACK/ESC**	20	 ■ By means of the ▲ and ▼ keys, select the desired menu or press **BACK/ESC** again to return directly to the HMI monitoring mode

Figure 11.2: *Start-up of the VVW PM*

11.3 PARAMETERS FOR SETTING THE VVW PM CONTROL

P0445 - MTPA Adjustment Gain

Adjustable Range:	0.00 to 4.00	**Factory Setting:**	0.50
Properties:	VVW PM		
Access Groups via HMI:	MOTOR		

Description:

This parameter can be set by checking the calculated power factor (P0011) and the output current (P0003) of the motor. Depending on the application, an adjustment to reduce the reactive power can be made, increasing the motor power factor and reducing the output current.

P0446 - Proportional Gain of the MTPA Regulator

Adjustable Range:	0.00 to 5.00	**Factory Setting:**	1.00
Properties:	VVW PM		
Access Groups via HMI:	MOTOR		

P0447 - Integral Gain of the MTPA Regulator

Adjustable Range:	0.000 to 0.500	**Factory Setting:**	0.012
Properties:	VVW PM		
Access Groups via HMI:	MOTOR		

Description:

These parameters are gains to dynamically regulate the motor output voltage for load variations. If P0446 = 0 the MTPA control will be disabled.

NOTE!
In general these parameters do not require readjustment.

P0448 - Current Stabilizer Adjustment

Adjustable Range:	0 to 30.0	**Factory Setting:**	0.75
Properties:	VVW PM		
Access Groups via HMI:	MOTOR		

Description:

This gain eliminates instability with oscillatory responses in currents and speed, and/or loss of synchronism after changes in loads and/or speed reference.

P0451 - Current Stabilizer Initial Speed

Adjustable Range:	0.0 % to 100.0 %	**Factory Setting:**	2.0
Properties:	VVW PM		
Access Groups via HMI:	MOTOR		

Description:

It sets a percentage of the motor rated speed to enable the motor current stabilization. If P0002 is greater than P0451 x P0402, the motor stabilization will be enabled.

P0452 - Time constant of the Current Low-Pass filter - DQ

Adjustable Range:	1 to 10000.0 ms	**Factory Setting:**	1
Properties:	VVW PM		
Access Groups via HMI:	MOTOR		

P0453 - Auxiliary Ramp Time at the Motor Start

Adjustable Range:	0 to 999.9 s	**Factory Setting:**	0.0 s
Properties:	VVW PM		
Access Groups via HMI:	MOTOR		

Description:

If P0453 other than 0.0 s, an auxiliary ramp will be enabled at the motor start until the initial speed of the Current stabilizer (P0451). Therefore, if the motor reference speed is greater than P0451 or P0453 equals zero, the auxiliary ramp is disabled, and the acceleration time of parameter P0100 is enabled again.

This function assists in the motor start, especially for ramp times above 100.0 s.

P0454 - Percentage of the MTPA Minimum Voltage

Adjustable Range:	0 to 100.0 %	**Factory Setting:**	100.0
Properties:	VVW PM		
Access Groups via HMI:	MOTOR		

Description:

This parameter sets the minimum voltage value that will be applied to the motor when the MTPA function is enabled. This minimum value is the percentage of the ratio $\frac{P0435 \text{ X Nrpm}}{1000}$.

E.g.:
P0435 = 120 V/kRPM.
Nrpm = 900 RPM.
P0454 = 50.0 %.
Minimum Voltage (V) = (P0454/100)* (P0435*Nrpm)/1000 = 54 V.

Where, Nrpm is the motor speed in RPM.

12 VECTOR CONTROL

It consists in the control type based on the separation of the motor current into two components:

- Flux producing current I_d (oriented with the motor electromagnetic flux).
- Torque producing current I_q (perpendicular to the motor flux vector).

The I_d current is related to the motor electromagnetic flux, while the Iq current is directly related to the torque produced at the motor shaft. With this strategy one gets the so called decoupling, i.e., one can control the motor flux and torque independently by controlling the I_d and I_q currents respectively.

Since these currents are represented by vectors that rotate at the synchronous speed, when observed from a stationary referential, a referential transformation is done so that they are changed to the synchronous referential. In the synchronous referential these values become DC values proportional the respective vector amplitudes. This simplifies considerably the control circuit.

When the I_d vector is aligned with the motor flux, it can be said that the vector control is orientated. Therefore it is necessary that the motor parameters be correctly adjusted. Some of those parameters must be programmed with the motor nameplate data and others obtained automatically through self-tuning or from the motor data sheet supplied by the manufacturer.

The Figure 12.3 on page 12-4 presents the block diagram for the vector control with encoder and the Figure 12.1 on page 12-2 for the sensorless vector control. The information of the speed, as well as of the currents measured by the inverter, will be used to obtain the correct vector orientation. In the vector with encoder control case, the speed is obtained directly from the encoder signal, while in the sensorless vector control there is an algorithm which estimates the speed, based in the output currents and voltages.

The vector control measures the current, separates the flux and torque portions and transforms these variables to the synchronous referential. The motor control is accomplished by imposing the desired currents and comparing them with the actual values.

12.1 SENSORLESS CONTROL AND WITH ENCODER

The Sensorless Vector Control is recommended for the majority of the applications, because it allows the operation in a speed variation range of 1:100, speed control with 0.5 % accuracy of rated speed, high starting torque and fast dynamic response.

Another advantage of this control type is the greater robustness against sudden line voltage and load changes, avoiding unnecessary overcurrent trips.

The necessary settings for the good operation of the sensorless vector control are done automatically. Therefore the used motor must be connected to the CFW500 inverter.

The Vector Control with Encoder on the motor presents the same advantages as those of the sensorless previously mentioned with the following additional benefits:

- Speed and torque control up to 0 (zero) rpm.
- Precision of 0.01 % in the speed control (if digital references are used, for example, via HMI, Profibus DP, DeviceNet, etc.)

For further details on the installation and connection of the incremental encoder, refer to the CFW500 user's manual.

NOTE!
The motor rated current must be higher than 1/3 of the inverter rated current.

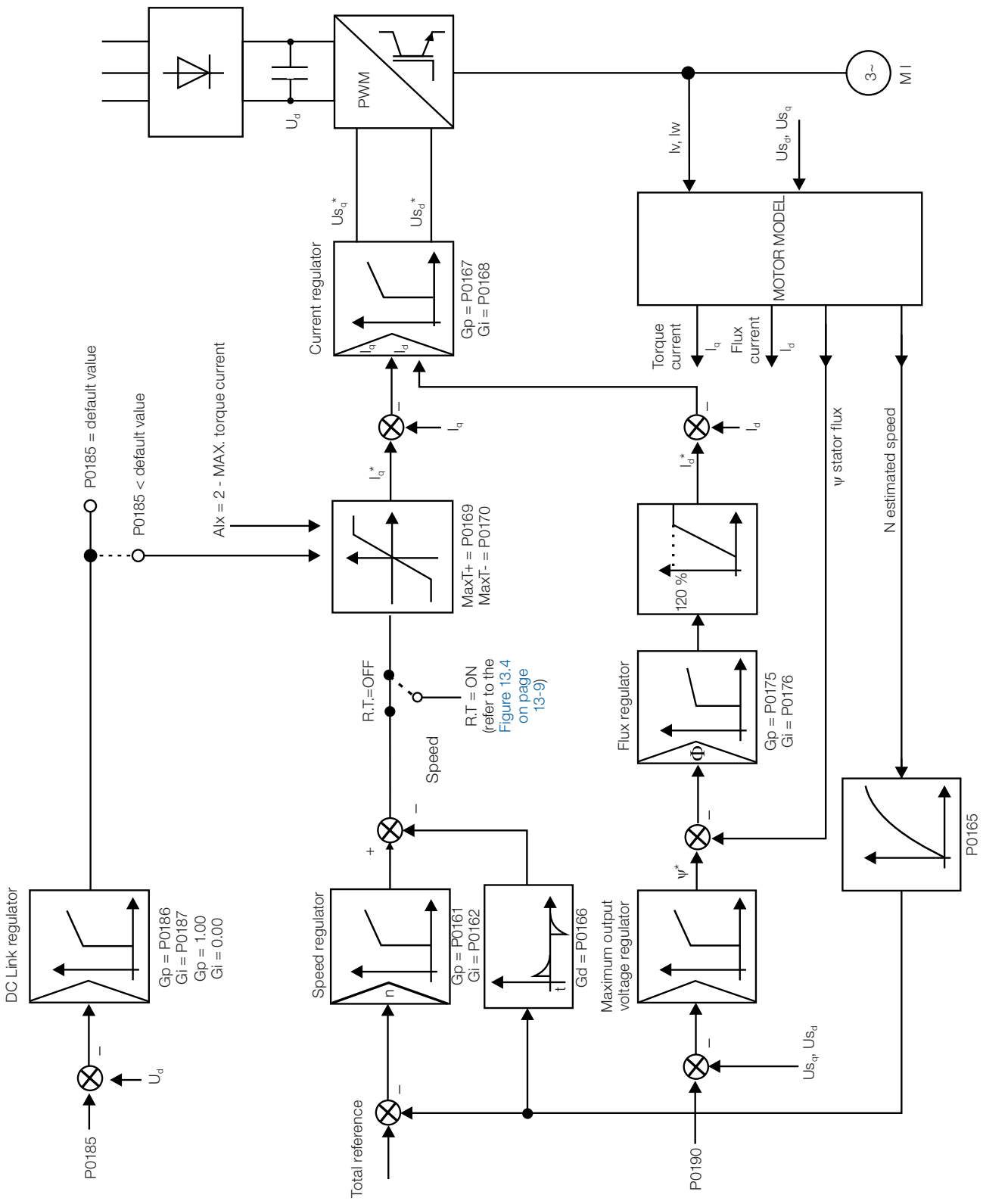

Figure 12.1: Sensorless vector control block diagram

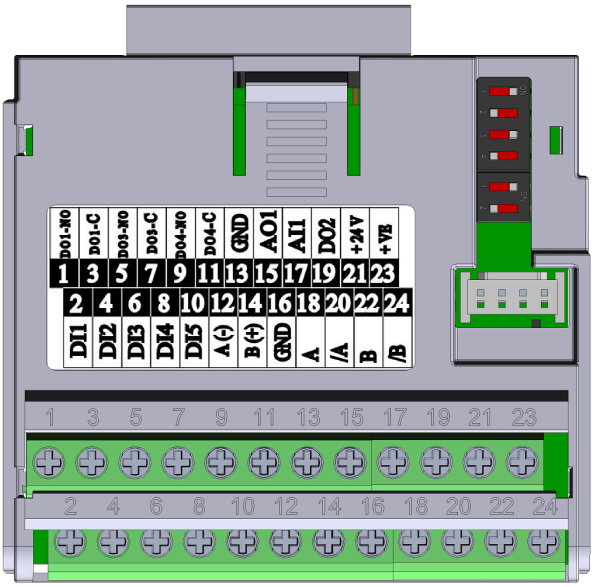

(a) CFW500-ENC

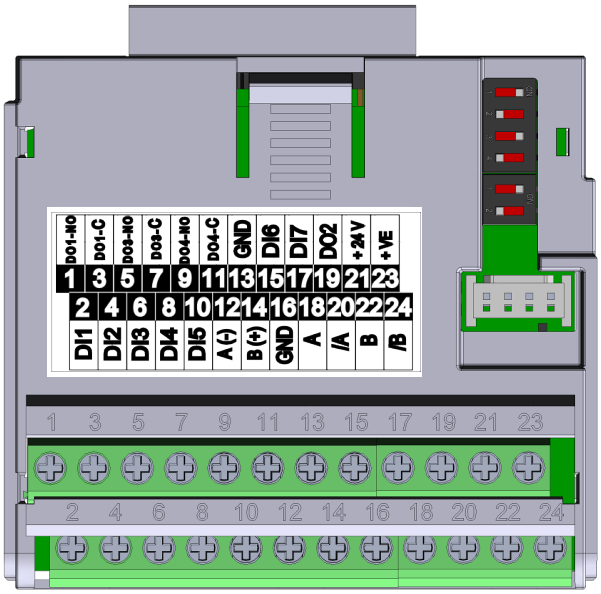

(b) CFW500-ENC2

Figure 12.2: *(a) e (b) Plug-in module for encoder reading*

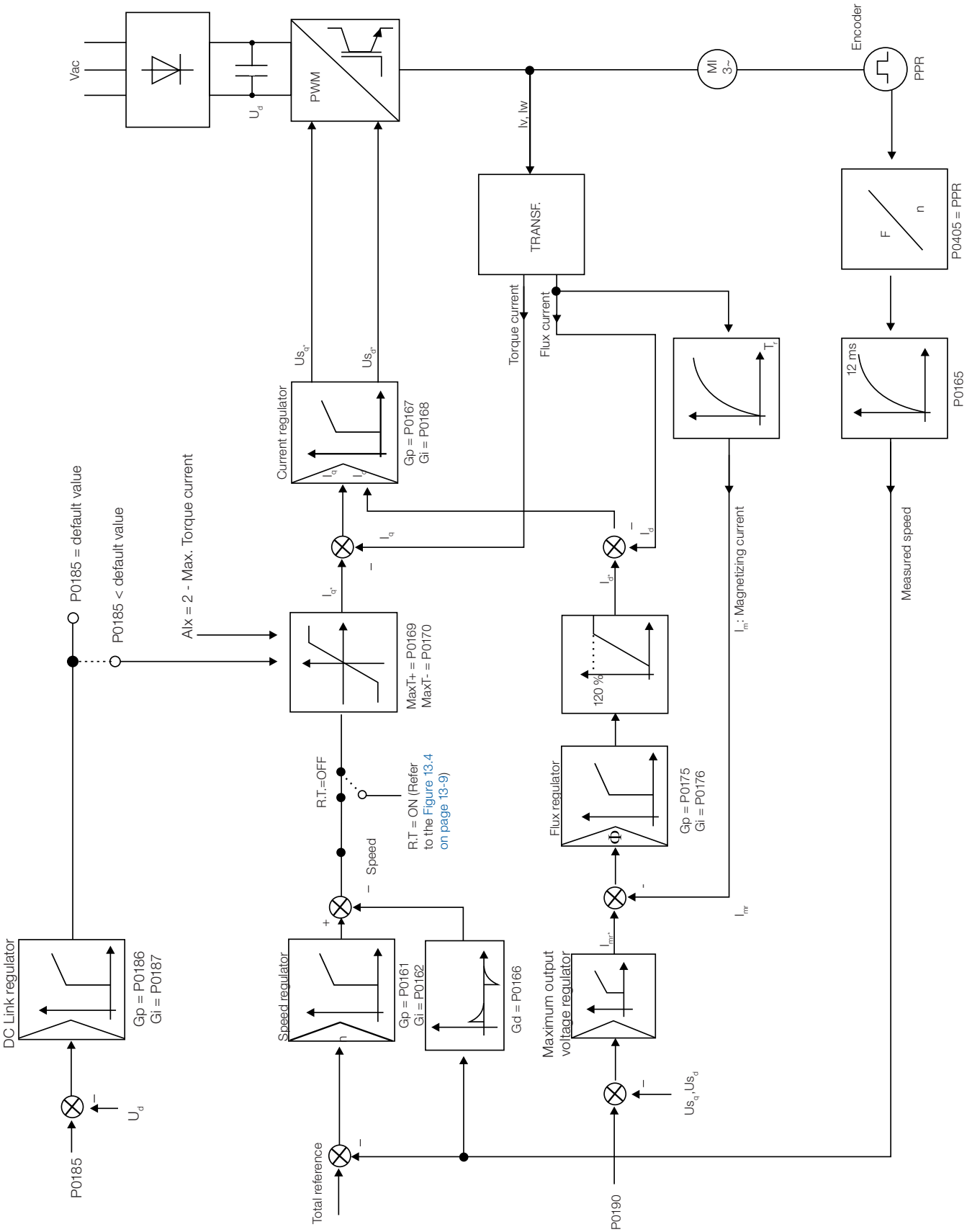

Figure 12.3: Vector with encoder control block diagram

12.2 I/f MODE (SENSORLESS)

NOTE!
It is activated automatically at low speeds if P0182 > 3 and when the Control Mode is Sensorless Vector (P0202 = 3).

The operation at the low speed region may present instability. In this region the motor operation voltage is also very low, being difficult to be measured accurately.

In order to keep a stable operation of the inverter in that region, the automatic commutation occurs, from sensorless mode to the so called I/f mode, which is a scalar control with imposed current. Scalar control with imposed current means a current control with a constant reference value, adjusted in a parameter and controlling only the frequency in an open loop.

The parameter P0182 defines the speed below which the transition to I/f mode occurs and the parameter P0183 defines the value of the current to be applied to the motor.

The minimum speed recommended for the operation of the Sensorless Vector Mode is 18 rpm for 60 Hz IV pole motors, and 15 rpm for 50 Hz IV pole motors. If P0182 ≤ 3 rpm the inverter will always operate in Sensorless Vector mode, i.e., the I/f function will be disabled.

12.3 SELF-TUNING

Some motor parameters that are not available on the motor nameplate, necessary for the operation of the sensorless vector or vector with encoder control, are estimated:

- Stator resistance.
- Motor flux leakage inductance.
- Rotor time constant T_r.
- Rated magnetizing current of the motor.
- Mechanic time constant of the motor and the driven load.

These parameters are estimated with the application of voltages and currents to the motor.

The parameters related to the regulators used by the vector control, as well as other control parameters, are adjusted automatically in function of the motor parameters estimated through the self-tuning routine. The best self-tuning results are obtained with a preheated motor.

The parameter P0408 controls the self-tuning routine. Depending on the chosen option some parameters can be obtained from tables that are valid for WEG motors.

In the option P0408 = 1 (No Rotation) the motor remains stopped throughout the self-tuning. The magnetizing current value (P0410) is obtained from a table, valid for WEG motors up to 12 poles.

In the option P0408 = 2 (Run for I_m) the value of P0410 is estimated with the motor rotating and the load decoupled from the motor shaft.

In the option P0408 = 3 (Run for T_m) the value of P0413 (Mechanic time constant – T_m) is estimated with the motor rotating. It must be done, preferably, with the load coupled to the motor.

NOTE!
Every time that P0408 = 1 or 2 the parameter P0413 (Mechanic time constant – T_m) will be adjusted for a value close to the motor rotor mechanic time constant. Therefore, the motor rotor inertia (table data valid for WEG motors), the inverter rated voltage and current, are taken into consideration.
P0408 = 2 (Run for I_m) in the vector with encoder mode (P0202 = 5): After finishing the self-tuning routine, couple the load to the motor and set P0408 = 4 (Estimate T_m). In this case P0413 will be estimated taking into account also the driven load.
If the option P0408 = 2 (Run for I_m) is executed with the load coupled to the motor, an incorrect value of P0410 (I_m) may be estimated. This will implicate in estimation error for P0412 (rotor time constant - T_r) and for P0413 (mechanic time constant – T_m). Overcurrent fault (F0071) may also occur during the inverter operation.
Note: The term "load" includes everything that might be coupled to the motor shaft, for instance, gearbox, inertia disk, etc.
In the option P0408 = 4 (Estimate T_m) the self-tuning routine estimates only the P0413 (Mechanic time constant – T_m) value, with the motor rotating. It must be done, preferably, with the load coupled to the motor.
During its execution, the self-tuning routine can be canceled by pressing the O key, provided that the values of P0409 through P0413 be all different from zero.

For more details on the self-tuning parameters, refer to item 12.7.5 Self-Tuning on page 12-20, in this manual.

Alternatives for the acquisition of the motor parameters:

Instead of running the self-tuning, it is possible to obtain the values for P0409 to P0412 in the following manner:

- From the motor test data sheet that can be supplied by its manufacturer. Refer to item 12.6.1 Adjustment of the Parameters P0409 to P0412 Based on the Motor Data Sheet on page 12-13, of this manual.
- Manually, by copying the contents of the parameters from another CFW500 inverter that uses an identical motor.

12.4 TORQUE CONTROL

In vector control modes sensorless or with encoder, it is possible to use the inverter in torque control mode instead of using it in speed control mode. In this case the speed regulator must be kept saturated and the imposed torque value is defined by the torque limits in P0169/P0170.

Performance of the torque control:
Vector control with encoder:
Torque control range: 10 % to 180 %.
Accuracy: ± 5 % of the rated torque.

Sensorless vector control:
Torque control range: 20 % to 180 %.
Accuracy: ± 10 % of the rated torque.
Minimum operating frequency: 3 Hz.

When the speed regulator is positively saturated, i.e., forward speed direction defined in P0223/P0226, the value for the torque current limitation is adjusted in P0169. When the speed regulator is negatively saturated, i.e., reverse speed direction, the value for the torque current limitation is adjusted in P0170.

According to the equations explained in (see page 18-3), the calculation of the torque on the motor shaft may be represented by the equation below as a function of P0169/P0170.

The torque at the motor shaft (T_{motor}) in % is given by the formula:

(*) The equation below must be used for "+" torque. Replace P0169 by P0170 for "-" torque.

$T_{motor}(\%) = P0169 \times k$

Where the factor k is defined by:

- Region of constant flux (constant torque and below or equal to the synchronous speed):

$k = 1$

- Region of field weakening (region of constant power; higher than the synchronous speed):

$$k = \frac{N_{sync}}{P0002} \times \frac{P0190}{P0400}$$

Whose N_{sync} is the motor synchronous speed in RPM.

NOTE!
For torque control in the sensorless vector mode (P0202 = 4), observe:
- The torque limits (P0169/P0170) must be higher than 30 % to assure the motor starting. After the start and with the motor rotating above 3 Hz, they can be reduced, if necessary, to values below 30 %.
- For torque control applications with frequencies until to 0 Hz, use the vector with encoder control mode (P0202 = 5).

NOTE!
The motor rated current must be equivalent to the CFW500 rated current, in order that the torque control has the best possible accuracy.

Settings for the torque control:

Torque limitation:

1. Via parameters P0169, P0170 (through the keypad (HMI), Serial or Fieldbus). Refer to item 12.7.6 Torque Current Limitation on page 12-24.

2. Through the analog inputs AI1 or AI2. Refer to Chapter 14 DIGITAL AND ANALOG INPUTS AND OUTPUTS on page 14-1 , option 2 (maximum torque current).

Speed reference:

3. Set the speed reference 10 %, or more, higher than the working speed. This assures that the speed regulator output remains saturated at the maximum value allowed by the torque limit adjustment.

NOTE!
The torque limitation with the saturated speed regulator has also a protection (limitation) function. E.g.: for a winder, when the material being wound brakes, the regulator leaves the saturated condition and starts controlling the motor speed, which will be kept at the speed reference value.

12.5 OPTIMAL BRAKING

NOTE!
Only activated on the Vector with Encoder mode (P0202 = 5 or 4), when P0184 = 0, P0185 is smaller than the standard value and P0404 < 21 (75 CV).

NOTE!
The occurrence of optimal braking may cause at the motor:
- Increase of the vibration level.
- Increase of the acoustic noise.
- Increase of the temperature.

Verify the impact of those effects in the application before using the optimal braking.

It is a function that helps the motor controlled braking, eliminating in many cases the need of additional braking IGBT and braking resistor.

The Optimal Braking makes it possible braking the motor with a higher torque than the one obtained with traditional methods, as for instance, the braking by the injection of direct current (DC braking). In the DC braking case, only the losses in the motor rotor are used to dissipate the energy stored as the mechanic load inertia, rejecting the total friction losses. With the Optimal Braking, in the other hand, the total losses in the motor, as well as the total inverter losses, are used. It is possible to get a braking torque roughly 5 times greater than with DC braking.

In the Figure 12.4 on page 12-9 the Torque x Speed curve of a typical 10 hp/7.5 kW IV pole motor is presented. The braking torque obtained at the rated speed, for an inverter with a torque limit (P0169 and P0170) adjusted in a value equal to the motor rated torque, is supplied by the TB1 point on the Figure 12.4 on page 12-9. The value of TB1 is on the function of the motor efficiency, and it is defined by the following expression, being despised the attrition losses:

$$TB1 = \frac{1-\eta}{\eta}$$

Where:
η = motor efficiency.

In the Figure 12.4 on page 12-9 case, the efficiency of the motor for the rated load is η = 0.84 (or 84 %), which results in TB1 = 0.19 or 19 % of the motor rated torque.

The braking torque, starting from the TB1 point, varies in the inverse ratio of the speed (1/N). At low speeds, the braking torque reaches the torque limit of the inverter. In the Figure 12.4 on page 12-9 case, the torque reaches the torque limitation (100 %) when the speed is less than approximately 20 % of the rated speed.

It is possible to increase the braking torque by increasing the inverter current limitation during the optimal braking (P0169 – torque in the forward speed direction or P0170 – reverse).

Generally smaller motors have lower efficiency because they present more losses. Therefore, comparatively higher braking torque is obtained if they are compared to bigger motors.

Examples: 1 hp/0.75 kW, IV poles: η = 0.76 resulting in TB1 = 0.32.
20 hp/15.0 kW, IV poles: η = 0.86 resulting in TB1 = 0.16.

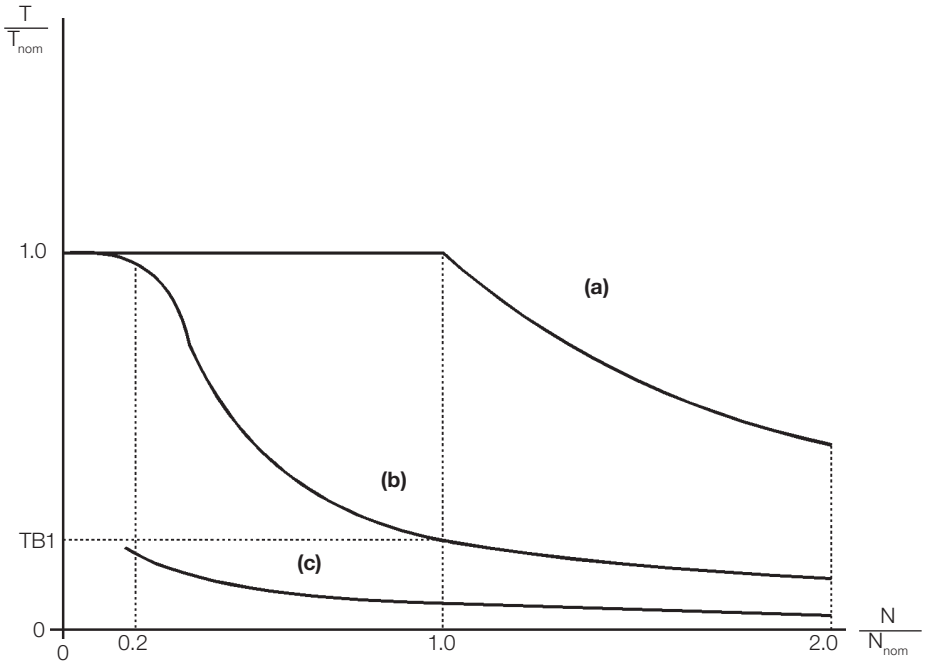

(a) Torque generated by the motor in normal operation, driven by the inverter in the "motor mode" (load resistant torque)
(b) Braking torque generated by the Optimal Braking use
(c) Braking torque generated by the DC braking use

Figure 12.4: *T x N curve for Optimal Braking with a typical 10 hp/7.5 kW motor, driven by an inverter with the torque adjusted at a value equal to the motor rated torque*

In order to use the Optimal Braking:

1. Activate the optimal braking by setting P0184 = 0 (DC Link Regulation Mode = with losses) and set the DC Link regulation level in P0185, as presented in item 12.7.8 DC Link Regulator on page 12-25, with P0202 = 3 or 4.

2. In order to enable and disable the Optimal Braking via a digital input, set one of the inputs (DIx) for "DC Link Regulation". (P0263…P0270 = 25 and P0184 = 2).
   Results:
   DIx = Active: Optimal Braking is active, equivalent to P0184 = 0.
   DIx = Inactive: Optimal Braking is inactive.

12.6 MOTOR DATA

In this group are listed the parameters for the setting of the used motor data. Adjust them according to the motor nameplate data (P0398 to P0407), except P0405, and by means of the self-tuning routine or with the data existent in the motor data sheet (the other parameters). In the Vector Control mode the parameters P0399 and P0407 are not used.

P0399 – Motor Rated Efficiency

Refer to the Section 10.1 VVW CONTROL PARAMETERIZATION on page 10-3, for more details.

P0400 – Motor Rated Voltage

Adjustable Range:	200 to 600 V	**Factory Setting:**	220 V (P0296 = 0) 380 V (P0296 = 1) 380 V (P0296 = 2) 380 V (P0296 = 3) 380 V (P0296 = 4) 380 V (P0296 = 5) 575 V (P0296 = 6) 575 V (P0296 = 7)
Properties:	cfg		
Access Groups via HMI:	MOTOR, STARTUP		

Description:

Set it according to the motor nameplate data and to the motor cable wiring in the connection box.

This value cannot be higher than the rated voltage adjusted in P0296 (Line Rated Voltage).

NOTE!
In order to validate a new P0400 setting out of the Oriented Start-up Routine it is necessary to cycle the power of the inverter.

Table 12.1: *Default setting of P0400 according to the identified inverter model*

P0296	P0145 (Hz)	P0400 (V)
0	50.0	230
	60.0	220
1	50.0	400
	60.0	380
2	50.0	525
	60.0	575

For further information on model identification, refer to Table 6.2 on page 6-3.

12

P0401 – Motor Rated Current

Adjustable Range:	0.0 to 200.0 A	**Factory Setting:**	$1.0xI_{nom-ND}$
Properties:	cfg		
Access Groups via HMI:	MOTOR, STARTUP		

Description:

Set it according to the used motor nameplate data, taking into consideration the motor voltage.

In the Guided Start-up routine the value adjusted in P0401 automatically modifies the parameters related to the motor overload protection, according to the Table 12.3 on page 12-12.

P0402 – Motor Rated Speed

Adjustable Range:	0 to 30000 rpm	**Factory Setting:**	1750 rpm (1425 rpm)
Properties:	cfg		
Access Groups via HMI:	MOTOR, STARTUP		

Description:

Set it according to the used motor nameplate data.

For V/f and VVW controls the setting is from 0 to 30000 rpm.

For vector control the setting is from 0 to 7200 rpm.

P0403 – Motor Rated Frequency

Adjustable Range:	0 to 500 Hz	**Factory Setting:**	60 Hz (50) Hz
Properties:	cfg		
Access Groups via HMI:	MOTOR, STARTUP		

Description:

Set it according to the used motor nameplate data.

For V/f and VVW controls the setting range goes up to 500 Hz.

For vector control the setting range is from 30 Hz to 120 Hz.

NOTE!
For vector control, the minimum rated frequency is 30 Hz and the maximum is 120 Hz.

P0404 – Motor Rated Power

Adjustable Range:	0 to 19 (refer to the Table 12.2 on page 12-12)	**Factory Setting:**	According to the inverter model
Properties:	cfg		
Access Groups via HMI:	MOTOR, STARTUP		

Description:

Set it according to the used motor nameplate data.

Table 12.2: P0404 (Motor rated power) setting

P0404	Motor Rated Power (hp)
0	0.16 HP (0.12 kW)
1	0.25 HP (0.19 kW)
2	0.33 HP (0.25 kW)
3	0.50 HP (0.37 kW)
4	0.75 HP (0.55 kW)
5	1.00 HP (0.75 kW)
6	1.50 HP (1.10 kW)
7	2.00 HP (1.50 kW)
8	3.00 HP (2.20 kW)
9	4.00 HP (3.00 kW)
10	5.00 HP (3.70 kW)
11	5.50 HP (4.00 kW)
12	6.00 HP (4.50 kW)
13	7.50 HP (5.50 kW)
14	10.00 HP (7.50 kW)
15	12.50 HP (9.00 kW)
16	15.00 HP (11.00 kW)
17	20.00 HP (15.00 kW)
18	25.00 HP (18.50 kW)
19	30.00 HP (22.00 kW)

NOTE!
When adjusted via keypad (HMI), this parameter may change the parameter P0329 automatically. Refer to Section 13.4.1 Vector Flying Start on page 13-6.

P0405 – Encoder Pulse Number

Adjustable Range:	100 to 9999 ppr	**Factory Setting:**	1024 ppr
Properties:	cfg		
Access Groups via HMI:	MOTOR, STARTUP		

Description:

It sets the number of pulses per rotation (ppr) of the used incremental encoder.

P0406 – Motor Ventilation

Adjustable Range:	0 = Self-Ventilated 1 = Separated Ventilation	**Factory Setting:**	0
Properties:	cfg		
Access Groups via HMI:	MOTOR, STARTUP		

Description:

During the Oriented Start-up Routine, the value adjusted in P0406 changes the parameters related to the motor overload automatically, in the following manner:

Table 12.3: Motor overload protection modification in function of P0406

P0406	P0156 (Overl. Curr. 100 %)	P0157 (Overl. Curr. 50 %)	P0158 (Overl. Curr. 5 %)
0	1.05xP0401	0.9xP0401	0.65xP0401
1	1.05xP0401	1.05xP0401	1.05xP0401

P0407 – Motor Rated Power Factor

Refer to the Section 10.1 VVW CONTROL PARAMETERIZATION on page 10-3, for more details.

P0408 – Run Self-Tuning

P0409 – Motor Stator Resistance (Rs)

P0410 – Motor Magnetization Current (I_m)

P0411 – Motor Flux Leakage Inductance (σls)

P0412 – Lr/Rr Constant (Rotor Time Constant – T_r)

P0413 – T_m Constant (Mechanical Time Constant)

Self-Tuning function parameters. Refer to item 12.7.5 Self-Tuning on page 12-20.

12.6.1 Adjustment of the Parameters P0409 to P0412 Based on the Motor Data Sheet

Being in the possession of the motor equivalent circuit data, it is possible to calculate the value to be programmed in the parameters from P0409 to P0412, instead of using the self-tuning to obtain them.

Input data:

Motor data sheet:

V_n = testing voltage to get the motor parameters in Volts.
f_n = testing frequency to get the motor parameters in Hz.
R_1 = resistance of the motor stator per phase, in Ohms.
R_2 = resistance of the motor rotor per phase, in Ohms.
X_1 = stator inductive reactance, in Ohms.
X_2 = rotor inductive reactance, in Ohms.
X_m = magnetizing inductive reactance, in Ohms.
I_o = motor no load current.
ω = angular speed.
$\omega = 2 \times \pi \times f_n$

$R_s = R_1$

$I_m = I_0 \times 0.95$

$$\sigma ls = \frac{[X_1 + (X_2 \times X_m) / (X_2 + X_m)]}{\omega}$$

$$T_r = \frac{(X_2 + X_m)}{\omega \times R_2}$$

1. For motors that allow two kinds of connection (Y / Δ or YY / ΔΔ):

- When the motor is connected in Y or YY:
  P409 = R_s
  P411= σls

- When the motor is connected in Δ or ΔΔ:
  $P409 = \frac{R_s}{3}$
  $P411 = \frac{\sigma ls}{3}$

2. For motors that allow three kinds of connection (YY / ΔΔ / Δ):

- When, on the data sheet, it is considered connection in YY or ΔΔ and the motor is connected in YY:
  P409 = R_s
  P411= σls

- When, on the data sheet, it is considered connection in YY or ΔΔ and the motor is connected in ΔΔ:
  $P409 = \frac{R_s}{3}$
  $P411 = \frac{\sigma ls}{3}$

- When, on the data sheet, it is considered connection in YY or ΔΔ and the motor is connected in Δ:
  $P409 = \frac{4 \times R_s}{3}$
  $P411 = \frac{4 \times \sigma ls}{3}$

- When, on the data sheet, it is considered connection in Δ and the motor is connected in YY:
  $P409 = \frac{R_s}{4}$
  $P411 = \frac{\sigma ls}{4}$

- When, on the data sheet, it is considered connection in Δ and the motor is connected in ΔΔ:
  $P409 = \frac{R_s}{12}$
  $P411 = \frac{\sigma ls}{12}$

- When, on the data sheet, it is considered connection in Δ and the motor is connected in Δ:
  $P409 = \frac{R_s}{3}$
  $P411 = \frac{\sigma ls}{3}$

12

Regardless of the connection type used on the motor and the connection type indicated on the data sheet, parameters P410 and P412 are defined as:

P410=I_m

P412= T_r

For conditions not included above, contact WEG.

12.7 VECTOR CONTROL

12.7.1 Speed Regulator

The parameters related to the CFW500 speed regulator are presented in this group.

P0161 – Speed Regulator Proportional Gain

Adjustable Range:	0.0 to 63.9	**Factory Setting:**	7.0

P0162 – Speed Regulator Integral Gain

Adjustable Range:	0.000 to 9.999	**Factory Setting:**	0.005
Properties:	Vector		

Description:

The speed regulator gains are calculated automatically in function of the parameter P0413 (T_m constant).

However, these gains can be adjusted manually in order to optimize the speed dynamic response, which becomes faster with their increase. Yet, if the speed begins to oscillate, they must be reduced.

In a general manner, one can say that the Proportional gain (P0161) stabilizes abrupt speed or reference changes, while the Integral gain (P0162) corrects the error between the reference and the speed, and improves the torque response at low speeds as well.

Procedure for Manual Optimization of the Speed Regulator:

1. Select the acceleration (P0100) and/or deceleration (P0101) time according to the application.
2. Adjust the speed reference for 75 % of the maximum value.
3. Configure an analog output (AOx) for Real Speed, by programming P0251 or P0254 in 2.
4. Disable the speed ramp (Run/Stop = Stop) and wait until the motor stops.
5. Enable the speed ramp (Run/Stop = Run). Observe with an oscilloscope the motor speed signal at the chosen analog output.
6. Verify among the options of the Figure 12.5 on page 12-15, which waveform best represents the observed signal.

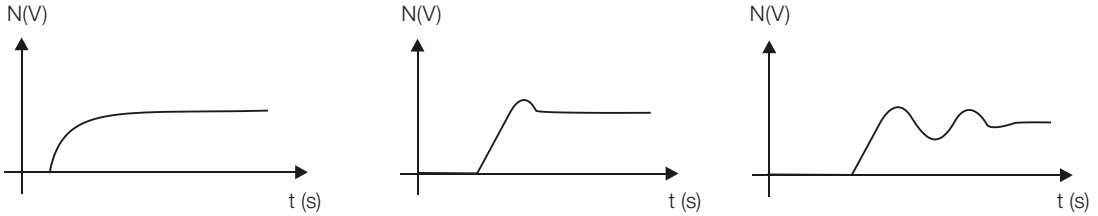

(a) Low integral gain (P0162) and/ or High proportional gain (P0161) **(b) Optimized speed regulator** **(c) High integral gain (P0162) and/or low proportional gain (P0161)**

Figure 12.5: *(a) to (c) Speed regulators response types*

7. Adjust P0161 and P0162 according to the response type presented in the Figure 12.5 on page 12-15.

(a) Reduce the proportional gain (P0161) and/or increase the integral gain (P0162).
(b) Speed regulator is optimized.
(c) Increase the proportional gain and/or reduce the integral gain.

P0165 – Speed Filter

Adjustable Range:	0.012 to 1.000 s	**Factory Setting:**	0.012 s
Properties:	Vector		
Access Groups via HMI:			

Description:

It adjusts the speed filter time constant. Refer to the Figure 12.1 on page 12-2 or Figure 12.3 on page 12-4.

> **NOTE!**
> Generally, this parameter must not be changed. The increment in its value turns the system response slower.

P0166 – Speed Regulator Differential Gain

Adjustable Range:	0.00 to 7.99	**Factory Setting:**	0.00
Properties:	Vector		
Access Groups via HMI:			

Description:

The differential action may minimize the effects of the application or removal of load, in the motor speed. Refer to the Figure 12.1 on page 12-2 or Figure 12.3 on page 12-4.

Table 12.4: *Differential gain action in the speed regulator*

P0166	Diferential Gain Actuation
0.00	Inactive
0.01 to 7.99	Active

12.7.2 Current Regulator

The parameters related to the CFW500 current regulator are presented in this group.

P0167 – Current Regulator Proportional Gain

Adjustable Range:	0.00 to 1.99	**Factory Setting:**	0.50

P0168 – Current Regulator Integral Gain

Adjustable Range:	0.000 to 1.999	**Factory Setting:**	0.010
Properties:	Vector		
Access Groups via HMI:			

Description:

Parameters P0167 and P0168 are adjusted automatically as a function of the parameters P0411 and P0409.

NOTE!
Do not change these parameters values.

12.7.3 Flux Regulator

The parameters related to the CFW500 flux regulator are presented next.

P0175 – Flux Regulator Proportional Gain

Adjustable Range:	0.0 to 31.9	**Factory Setting:**	2.0

P0176 – Flux Regulator Integral Gain

Adjustable Range:	0.000 to 9.999	**Factory Setting:**	0.020
Properties:	Vector		
Access Groups via HMI:			

Description:

These parameters are adjusted automatically in function of the parameter P0412. In general, the automatic setting is sufficient and the readjustment is not necessary.

These gains must only be readjusted manually when the flux current signal (Id*) is unstable (oscillating) and compromising the system operation.

NOTE!
For gains in P0175 > 12.0 the flux current (Id*) may become unstable.

Note:
(Id*) is observed at the analog outputs AO1 and/or AO2, by setting P0251 = 16 and/or P0254 = 16.

P0178 – Rated Flux

Adjustable Range:	0.0 to 150.0 %	**Factory Setting:**	100.0 %
Properties:			
Access Groups via HMI:			

Description:

The parameter P0178 is the flux reference, while the maximum value for the flux (magnetization) current is 150 %.

> **NOTE!**
> This parameter must not be modified.

P0181 – Magnetization Mode

Adjustable Range:	0 = General Enable 1 = Run/Stop	**Factory Setting:**	0
Properties:	cfg, Enc		
Access Groups via HMI:			

Description:

Table 12.5: Magnetization Mode

P0181	Action
0 = General Enable	Applies magnetizing current after General Enabling = ON
1 = Run/Stop	Applies magnetizing current after Run/Stop = Run

In the sensorless vector control mode, the magnetizing current is permanently active. In order to disable it when the motor is stopped, a digital input programmed for General Enabling can be used. There is also the possibility of programming the "sleep" mode. Refer to the Section 13.2 SLEEP MODE on page 13-3. Besides this, a delay for disabling the magnetizing current can be set by programming P0219 bigger than zero.

P0188 – Proportional Gain of the Maximum Output Voltage Regulador

P0189 – Integral Gain of the Maximum Output Voltage Regulador

Adjustable Range:	0.000 to 7.999	**Factory Setting:**	P0188 = 0.200 P0189 = 0.001
Properties:	Vector		
Access Groups via HMI:			

Description:

These parameters adjust the maximum output voltage regulator gains. In general the factory setting is adequate for the majority of the applications. Refer to the Figure 12.1 on page 12-2 or Figure 12.3 on page 12-4.

P0190 – Maximum Output Voltage

Adjustable Range:	0 to 600 V	**Factory Setting:**	220 V (P0296 = 0) 380 V (P0296 = 1) 400 V (P0296 = 2) 440 V (P0296 = 3) 480 V (P0296 = 4) 525 V (P0296 = 5) 575 V (P0296 = 6) 600 V (P0296 = 7)
Properties:	Vector		
Access Groups via HMI:			

Description:

This parameter defines the value of the maximum output voltage. Its standard value is defined in the condition of the nominal supply voltage.

The voltage reference used in the regulator "Maximum output voltage" (see the Figure 12.1 on page 12-2 or Figure 12.3 on page 12-4) is directly proportional to the voltage supply

If this voltage increases, the output voltage will then be able to increase to the adjusted value in the parameter P0400 - Motor Rated Voltage.

If the voltage supply decreases, the maximum output voltage will decrease in the same proportion.

12.7.4 I/f Control

P0182 – Speed for I/f Control Activation

Adjustable Range:	0 to 180 rpm	**Factory Setting:**	30 rpm
Properties:	Sless		
Access Groups via HMI:	MOTOR		

Description:

It defines the speed of the transition from I/f mode to the sensorless vector control and vice-versa.

The minimum recommended speed for the operation of the sensorless vector control is 18 rpm for motors with rated frequency of 60 Hz and 4 poles and 15 rpm for motors with 4 poles with rated frequency of 50 Hz.

NOTE!
For P0182 ≤ 3 rpm the I/f function will be disabled and the inverter will remain always in the sensorless vector mode.

P0183 – Current in the I/f Mode

Adjustable Range:	15.0 to 300.0 %	**Factory Setting:**	120.0 %
Properties:	Sless		
Access Groups via HMI:	MOTOR		

Description:

It defines the current to be applied to the motor when the inverter is operating in the I/f mode, that is, with the motor speed below the value defined by parameter P0182. The value of the magnetizing current is given in percentage of the motor rated current in P0410.

12.7.5 Self-Tuning

In that group are the parameters that are related to the motor and can be estimated by the inverter during the self-tuning routine.

P0408 – Run Self-Tuning

Adjustable Range:	0 = No 1 = No Rotation 2 = Run for I_m 3 = Run for T_m 4 = Estimate T_m	**Factory Setting:**	0
Properties:	cfg, VVW, Vector		
Access Groups via HMI:	STARTUP		

Description:

By changing from the factory setting to one of the 4 available options, it is possible to estimate the value of the parameters related to the motor being used. Refer to the next description for more details on each option.

12

Table 12.6: *Self-tuning options*

P0408	Self-tuning	Control Type	Estimate Parameter
0	No	–	–
1	No Rotation	Sensorless vector, with encoder or VVW	P0409, P0410, P0411, P0412 and P0413
2	Run for I_m	Sensorless vector or with encoder	
3	Run for T_m	Vector with encoder	
4	Estimate T_m	Vector with encoder	P0413

P0408 = 1 – No rotation: the motor stands still during the self-tuning. The P0410 value is obtained from a table, valid for WEG motors up to 12 poles.

NOTE!
Therefore P0410 must be equal to zero before initiating the self-tuning. If P0410 ≠ 0, the self-tuning routine will keep the existent value.

Note: When using another brand of motor P0410 must be adjusted with the adequate value (no load motor current) before initiating the self-tuning.

P0408 = 2 – Run for Im: the P0410 value is estimated with the motor rotating. It must be executed without load coupled to the motor. P0409, P0411 to P0413 are estimated with the motor standing still.

ATTENTION!
If the option P0408 = 2 (Run for I_m) is performed with the load coupled to the motor, an incorrect value of P0410 (Im) may be estimated. This will implicate in estimation error for P0412 (Rotor time constant - T_r) and for P0413 (Mechanic time constant – T_m). Overcurrent fault (F0071) may also occur during the inverter operation.

Note: The term "load" includes everything that might be coupled to the motor shaft, for instance, gearbox, inertia disk, etc.

P0408 = 3 – Run for T_m: the value of P0413 (Mechanic time constant – T_m) is estimated, with the motor rotating. It must be done, preferably, with the load coupled to the motor. P0409 to P0412 are estimated with the motor standing still and P0410 is estimated in the same manner as with P0408 = 1.

P0408 = 4 – Estimate T_m: it estimates only the P0413 (Mechanic time constant – T_m) value, with the motor rotating. It must be done, preferably, with the load coupled to the motor.

NOTES!
- Every time that P0408 = 1 or 2:
  The parameter P0413 (Mechanic time constant – T_m) will be adjusted to a value close to the motor mechanic time constant. Therefore, the motor rotor inertia (table data valid for WEG motors), the inverter rated voltage and current are taken into consideration.
- Vector mode with encoder (P0202 = 5):
  When using P0408 = 2 (Run for I_m), one must, after finishing the self-tuning routine, couple the load to the motor and set P0408 = 4 (Estimate T_m) in order to estimate the value of P0413. In this case P0413 will also consider the driven load.
- VVW mode – Voltage Vector WEG (P0202 = 3):
  In the VVW control self-tuning routine only the value of the stator resistance (P0409) will be obtained. Therefore, the self-tuning will always be performed without rotating the motor.
- Better self-tuning results are obtained with the motor warm.

P0409 – Motor Stator Resistance (Rs)

Adjustable Range:	0.01 to 99.99 ohm	**Factory Setting:**	According to the inverter model
Properties:	V,f, cfg, VVW, Vector		
Access Groups via HMI:	MOTOR, STARTUP		

Description:
It is the value estimated by the self-tuning.

NOTE!
The P0409 setting determines the value of the current regulator integral gain P0168. The parameter P0168 is recalculated every time the content of P0409 is modified via keypad (HMI).
If the estimated value of the motor stator resistance is too high for the inverter used (for example: motor not connected or motor too small for the inverter) the inverter indicates fault F0033.
The value of parameter P0409 influences the DC braking voltage in P0302, that is, it determines the value of the voltage imposed by the inverter during the DC braking so as to reach the desired current at the output.

P0410 – Motor Magnetization Current (I_m)

Adjustable Range:	0.0 to 100.0 A	**Factory Setting:**	0.0 A
Properties:	Vector		
Access Groups via HMI:	MOTOR, STARTUP		

Description:

It is the motor magnetization current value.

It can be estimated by the self-tuning routine when P0408 = 2 (Run for I_m) or obtained from an internal table based in standard WEG motors, when P0408 = 1 (No rotation).

When a standard WEG motor is not used and it is not possible to run the self-tuning with P0408 = 2 (Run for I_m), then adjust P0410 with a value equal to the motor no load current, before initiating the self-tuning.

For P0202 = 5 (vector mode with encoder), the value P0410 determines the motor flux, therefore it must be properly adjusted. If it is low, the motor will operate with a reduced flux compared to the rated condition, having, consequently, its torque capability reduced.

P0411 – Motor Flux Leakage Inductance (σls)

Adjustable Range:	0.00 to 99.99 mH	**Factory Setting:**	0.00 mH
Properties:	cfg, Vector		
Access Groups via HMI:	MOTOR, STARTUP		

Description:

It is the value estimated by the self-tuning.

The P0411 setting determines the current regulator proportional gain.

12

NOTE!
When adjusted via the keypad (HMI), this parameter may change the parameter P0167 automatically.

P0412 – Lr/Rr Constant (Rotor Time Constant – T_r)

Adjustable Range:	0.000 to 9.999 s	**Factory Setting:**	0.000 s
Properties:	Vector		
Access Groups via HMI:	MOTOR, STARTUP		

Description:

The P0412 setting determines the flux regulator gains (P0175 and P0176).

The value of this parameter interferes in the speed accuracy in the sensorless vector control.

Normally the self-tuning is performed with the motor cold. Depending on the motor, the P0412 value may vary more or less with the motor temperature. Thus, for the sensorless vector control and normal operation with the motor warm, P0412 must be adjusted until the speed of the motor with load (measured at the motor shaft with a tachometer) stays equal to that one indicated on the keypad (HMI) (P0001).

This adjustment must be performed with half the rated speed.

For P0202 = 5 (vector with encoder), if P0412 is incorrect, the motor will loose torque. Thus, one must adjust P0412 so that at half the rated speed, and with stable load, the motor current (P0003) stays the lowest possible.

In the sensorless vector control mode the P0175 gain, provided by the self-tuning, will be limited in the range: 3.0 ≤ P0175 ≤ 8.0.

Table 12.7: *Typical rotor constant (Tr) values for WEG motors*

Motor Power (hp) / (kW)	T_r (s)			
	Number of Poles			
	2 (50 Hz / 60 Hz)	4 (50 Hz / 60 Hz)	6 (50 Hz / 60 Hz)	8 (50 Hz / 60 Hz)
2 / 1.5	0.19 / 0.14	0.13 / 0.14	0.1 / 0.1	0.07 / 0.07
5 / 3.7	0.29 / 0.29	0.18 / 0.12	0.14 / 0.14	0.14 / 0.11
10 / 7.5	0.36 / 0.38	0.32 / 0.25	0.21 / 0.15	0.13 / 0.14
15 / 11	0.52 / 0.36	0.30 / 0.25	0.20 / 0.22	0.28 / 0.22
20 / 15	0.49 / 0.51	0.27 / 0.29	0.38 / 0.2	0.21 / 0.24
30 / 22	0.70 / 0.55	0.37 / 0.34	0.35 / 0.37	0.37 / 0.38
50 / 37	0.9 / 0.84	0.55 / 0.54	0.62 / 0.57	0.31 / 0.32
100 / 75	1.64 / 1.08	1.32 / 0.69	0.84 / 0.64	0.70 / 0.56
150 / 110	1.33 / 1.74	1.05 / 1.01	0.71 / 0.67	0.72 / 0.67
200 / 150	1.5 / 1.92	1.0 / 0.95	1.3 / 0.65	0.8 / 1.03

NOTE!
When adjusted via the keypad (HMI), this parameter may change automatically the following parameters: P0175, P0176, P0327 and P0328.

P0413 – T_m Constant (Mechanical Time Constant)

Adjustable Range:	0.00 to 99.99 s	**Factory Setting:**	0.00 s
Properties:	Vector		
Access Groups via HMI:	MOTOR, STARTUP		

Description:
The P0413 setting determines the speed regulator gains (P0161 and P0162).

When P0408 = 1 or 2, it must be observed:

- If P0413 = 0, the time constant T_m will be obtained in function of the inertia of the programmed motor (table value).
- If P0413 > 0, the value of P0413 will not be changed by the self-tuning.

Sensorless vector control (P0202 = 3):

- When the P0413 value obtained through the self-tuning provides inadequate speed regulator gains (P0161 and P0162), it is possible to change them by setting P0413 via keypad (HMI).
- The P0161 gain provided by the self-tuning or through P0413 change, will be limited to the range: 6.0 ≤ P0161 ≤ 9.0.
- The P0162 value varies in function of the P0161 value.
- I n case it be necessary to increase even more these gains, they must be adjusted directly at P0161 and P0162.

Note: Values of P0161 > 12.0 may turn the torque current (Iq) and the motor speed unstable (oscillating).

Vector control with encoder (P0202 = 4):

- The P0413 value is estimated by the self-tuning when P0408 = 3 or 4.
- The measurement procedure consists in accelerating the motor up to 50 % of the rated speed, applying a current step equal to the motor rated current.
- In case that it is not possible to submit the load to this type of request, adjust P0413 via keypad (HMI), refer to item 12.7.1 Speed Regulator on page 12-14.

12.7.6 Torque Current Limitation

The parameters placed in this group define the torque limitation values.

P0169 – Maximum "+" Torque Current

P0170 – Maximum "-" Torque Current

Adjustable Range:	0.0 to 350.0 %	**Factory Setting:**	125.0 %
Properties:	Vector		
Access Groups via HMI:	BASIC		

Description:

These parameters limit the value of the motor current component that produces "+" torque (P0169) or "-" torque (P0170). The setting is expressed as a percentage of rated motor current (P0401).

In case that any Analog Input (AIx) be programmed for the option 2 (Maximum Torque Current), P0169 and P0170 become inactive and the current limitation will be specified by the AIx. In this case the limitation value can be monitored at the parameter correspondent to the programmed AIx (P0018 or P0019).

If P0169 or P0170 is set too low, there might not be enough torque for the motor to drive the load. If the value set in the parameters is too high, overload or overcurrent fault may occur.

In the torque limitation condition the motor current can be calculated by:

$$I_{nom_torque} = \sqrt{P0401^2 - \left(P0410 \times \frac{P0178}{100}\right)^2} \quad \text{(Rated torque current)}$$

$$I_{motor} = \sqrt{\left(\frac{P0169^* \times I_{nom_torque}}{100}\right)^2 + \left(P0410 \times \frac{P0178}{100}\right)^2}$$

The maximum torque developed by the motor is given by:

$$T_{motor}(\%) = P0169 \times k$$

Where the factor k is defined by:

- Region of constant flux (constant torque and below or equal to the synchronous speed):

k = 1

- Region of field weakening (region of constant power; higher than the synchronous speed):

$$k = \frac{N_{sync}}{P0002} \times \frac{P0190}{P0400}$$

Whose N_{sync} is the motor synchronous speed in RPM.

> **NOTE!**
> The maximum setting value for these parameters is internally limited to 1.8 x P0295 (HD).

(*) In case that the torque current limitation be provided by an analog input, replace P0169 or P0170 by P0018 or P0019 according to the programmed AIx. For more details refer to Section 14.1 ANALOG INPUTS on page 14-1.

12.7.7 Supervision of Motor Real Speed

In some applications, the frequency inverter cannot operate in torque limitation, that is, the motor real speed cannot be much different from the speed reference. In case of operation in this condition, the frequency inverter will detect it and generate an alarm (A0168) or fault (F0169).

For this type of application, a maximum acceptable value of speed hysteresis for normal operating condition is defined (P0360). In case the value of the difference between the real speed and reference speed is greater than this hysteresis, the alarm condition Real Motor Speed Different from Speed Reference (A0168) will be detected. In case this alarm remains for a period (P0361), the fault condition Real Motor Speed Different from Speed Reference (F0169) will be generated.

P0360 – Speed Hysteresis

Adjustable Range:	0.0 to 100.0 %	**Factory Setting:**	10.0 %
Properties:	Vector		
Access Groups via HMI:			

Description:

This parameter defines the percentage of the motor synchronous speed that will be the speed hysteresis to detect that the Motor Real Speed is different from the Speed Reference and generate the alarm A0168. Value in 0.0 % disables the alarm A0168 and fault F0169.

P0361 – Time with Speed Different from Reference

Adjustable Range:	0.0 to 999.0 s	**Factory Setting:**	0.0 s
Properties:	Vector		
Access Groups via HMI:			

Description:

This parameter defines the time that the condition Motor Real Speed different from Speed Reference (A0168) must remain active in order to generate the fault Motor Real Speed different from Speed Reference (F0169). Value in 0.0 s disables only fault F0169.

12.7.8 DC Link Regulator

For the deceleration of high inertia loads or with short deceleration times, the CFW500 has available the DC Link Regulation function, which avoids the tripping of the inverter by overvoltage in the DC Link (F0022).

P0184 – DC Link Regulation Mode

Adjustable Range:	0 = With Losses 1 = Without Losses 2 = Enable/Disable DIx	**Factory Setting:**	1
Properties:	cfg, Vector		
Access Groups via HMI:	MOTOR		

Description:

It enables or disables the Optimal Braking function (Section 12.5 OPTIMAL BRAKING on page 12-8) in the DC voltage regulation, according to the next table.

Table 12.8: *DC Link regulation modes*

P0184	Action
0 = With losses (Optimal Braking)	The Optimal Braking is active as described at P0185. This assures the minimum possible deceleration time without using dynamic or regenerative braking
1 = Without losses	Automatic control of the deceleration ramp. The Optimal Braking is inactive. The deceleration ramp is automatically adjusted in order to keep the DC Link below the level adjusted in P0185 This procedure avoids the overvoltage fault at the DC Link (F0022). It can also be used with eccentric loads
2 = Enable/Disable via DIx	■ DIx = 24 V: Braking actuates as described for P0184 = 1 ■ DIx = 0 V: The Without Losses Braking stays inactive. The DC Link voltage will be controlled by the parameter P0153 (Dynamic Braking)

P0185 – DC Link Voltage Regulation Level

Adjustable Range:	339 to 1000 V	**Factory Setting:**	400 V (P0296 = 0) 800 V (P0296 = 1) 800 V (P0296 = 2) 800 V (P0296 = 3) 800 V (P0296 = 4) 1000 V (P0296 = 5) 1000 V (P0296 = 6) 1000 V (P0296 = 7)
Properties:	Vector		
Access Groups via HMI:			

Description:

This parameter defines the DC Link voltage regulation level during the braking. During the braking, the time of the deceleration ramp is automatically extended, thus avoiding an overvoltage fault (F0022). The setting of the DC Link regulation can be done in two manners:

1. With losses (Optimal Braking) – set P0184 = 0.

   1.1. P0404 < 20 (60 hp): in this way the current flux is modulated in a way to increase the losses of the motor, increasing the break torque. A better operation can be obtained with motors of smaller efficiency (small motors).

   1.2. P0404 > 20 (60 hp): the current flux will be increased up to the maximum value defined on P0169 or P0170, as the speed is reduced. The break torque in the weakness field area is small.

2. Without losses – set P0184 = 1. Activates only the DC Link voltage regulation.

NOTE!
The factory setting for P0185 is adjusted at the maximum, which disables the DC Link voltage regulation. In order to activate it, set P0185 according to the Table 12.9 on page 12-27.

Table 12.9: *DC Link voltage regulation recommended levels*

Inverter V_{nom}	200 ... 240 V	380 V	400 / 415 V	440 / 460 V	480 V	500 / 525 V	550 / 575 V	600 V
P0296	0	1	2	3	4	5	6	7
P0185	375 V	618 V	675 V	748 V	780 V	893 V	972 V	972 V

P0186 – DC Link Voltage Regulation Proportional Gain

Adjustable Range:	0.0 to 63.9	**Factory Setting:**	18.0

P0187 – DC Link Voltage Regulation Integral Gain

Adjustable Range:	0.000 to 9.999	**Factory Setting:**	0.002
Properties:	Vector		
Access Groups via HMI:			

Description:

These parameters adjust the DC Link voltage regulator gain.

Normally the factory settings are adequate for the majority of the applications, not being necessary to adjust them.

12.8 START-UP IN THE VECTOR MODES SENSORLESS AND WITH ENCODER

NOTE!
Read the whole CFW500 user's manual before installing, powering or operating the inverter.

Sequence for installation, verification, powering and start-up:

1. **Install the inverter:** according to the chapter 3 - Installation and Connection, of the CFW500 user's manual, wiring all the power and control connections

2. **Prepare the inverter and apply power:** according to the section 5.1 - Prepare for Start-up, of the CFW500 user's manual.

3. **Adjust the inverter to operate with the application line and motor:** by means of the "STARTUP" Menu access **P0317** and change its content to 1, which makes the inverter initiate the "Oriented Start-up" routine.

The "Oriented Start-up" routine presents on the keypad (HMI) the main parameters in a logical sequence. The setting of these parameters prepares the inverter for operation with the application line and motor. Verify the step by step sequence in the Figure 12.6 on page 12-29.

The setting of the parameters presented in this operation mode results in the automatic modification of the content of other inverter parameters and/or internal variables, as indicated in the Figure 12.6 on page 12-29. In this way one gets a stable operation of the control circuit with adequate values to obtain the best motor performance.

During the "Oriented Start-up" routine the "Config" (Configuration) status will be indicated on the keypad (HMI).

Parameters related to the motor:

- Program the contents of parameters from P0398, P0400 to P0406 directly with the motor nameplate data.

- Options for the setting of parameters P0409 to P0412:
  - Automatic, with the inverter executing the self-tuning routine as selected in one of the P0408 options.
  - From the motor data sheet supplied by its manufacturer. Refer to the procedure in item 12.6.1 Adjustment of the Parameters P0409 to P0412 Based on the Motor Data Sheet on page 12-13, of this manual.
  - Manually, copying the contents of the parameters from another CFW500 inverter, which uses an identical motor.

4. **Setting of specific parameters and functions for the application:** set the digital and analog inputs and outputs, HMI keys, etc., according to the application needs.

For applications:

- That are simple, which can use the factory settings programming for the digital and analog inputs and outputs, use the Menu "BASIC". Refer to item 5.2.2 - Basic Application Menu, of the CFW500 user's manual.

- That require only the digital and analog inputs and outputs with programming different from the factory settings, use the Menu "I/O".

- That need functions as Flying Start, Ride-Through, DC Braking, Dynamic Braking, etc., access and modify those function parameters by means of the Menu "PARAM".

Step	Action/Indication on the Display	Step	Action/Indication on the Display
1	 ■ Monitoring mode ■ Press the **ENTER/MENU** key to enter the 1st level of the programming mode	2	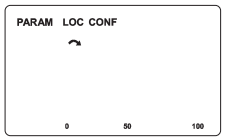 ■ The **PARAM** group is selected; press the ▲ or ▼ key until selecting the **STARTUP** group
3	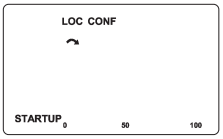 ■ When the **STARTUP** group is selected, press the **ENTER/MENU** key	4	 ■ The parameter **"P0317 – Oriented Start-up"** is then selected, press the **ENTER/MENU** to get into the parameter content
5	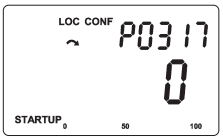 ■ Change the parameter P0317 to **"1 - Yes"**, by using the ▲ key	6	 ■ Press **ENTER/MENU** and with the ▲ and ▼ keys set the value set the value to 3 for sensorless vector control or 4 for vector control with encoder
7	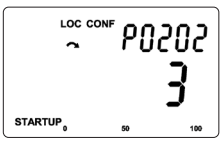 ■ Press **ENTER/MENU** to save the modification of P0202	8	 ■ Press the ▲ key to proceed with the Startup Vector

Step	Action/Indication on the Display	Step	Action/Indication on the Display
9	 ■ If necessary, modify the content of **"P0399 – Motor Rated Efficiency"**, or press the ▲ key for the next parameter	10	 ■ If necessary, modify the content of **"P0400 – Motor Rated Voltage"**, or press the ▲ key for the next parameter
11	 ■ If necessary, modify the content of **"P0401 – Motor Rated Current"**, or press the ▲ key for the next parameter	12	 ■ If necessary, modify the content of **"P0403 – Motor Rated Frequency"**, or press the key for the next parameter
13	 ■ If necessary, modify the content of **"P0402 – Motor Rated Speed"**, or press the ▲ key for the next parameter	14	 ■ If necessary, modify the content of **"P0404 – Motor Rated Power"**, or press the ▲ key for the next parameter
15	 ■ If necessary, change **"P0405 - Encoder Pulses Number"** according to the encoder model, or press the ▲ key for the next parameter	16	 ■ If necessary, modify the content of **"P0407 – Motor Rated Power Factor"**, or press the ▲ key for the next parameter
17	 ■ At this point, the HMI shows the option to do the Self-tuning. Whenever possible, execute the Self-tuning. To activate the Self-tuning, change the value of P0408 to **"1"**	18	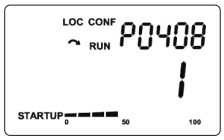 ■ During the self-tuning, the HMI will simultaneously indicate the **"RUN"** and **"CONF"** status. And the bar indicates the operation progress
19	 ■ At the end of the Self-tuning the value of P0408 automatically return to **"0"**, as well as the **"RUN"** and **"CONF"** status are erased ■ Press the ▲ key for the next parameter ■ The result of the Self-tuning are the values of the parameters P0409, P0410, P0411, P0412, and P0413	20	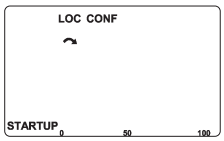 ■ To exit the **STARTUP** menu, just press **BACK/ESC**
21	 ■ By means of the ▲ and ▼ keys, select the desired menu or press **BACK/ESC** again to return directly to the HMI monitoring mode		

Figure 12.6: *Vector mode Oriented Start-up*

13 FUNCTIONS COMMON TO ALL THE CONTROL MODES

This chapter describes the functions common to the inverter V/f and VVW control modes, but which interferes in the drive performance.

13.1 RAMPS

The inverter ramp functions allow the motor to accelerate or decelerate faster or slower. They are adjusted by parameters that define the acceleration time between zero and the maximum speed (P0134) and the time for a deceleration from the maximum speed to zero.

In the CFW500, three ramps with different functions were implemented:

- 1st Ramp – standard for most functions.
- 2nd Ramp – it may be activated by the user, according to the drive requirement, by means of the inverter command word or by a digital input.
- 3rd Ramp – it is used for the inverter protection functions, such as: Current Limitation, DC Link Control, Quick Stop. The 3rd Ramp has priority over the other ramps.

NOTE!
The setting with too short ramp time may cause overcurrent in the output (F0070), undervoltage (F0021) or overvoltage (F0022) of the DC Link.

P0100 – Acceleration Time

Adjustable Range:	0.1 to 999.0 s	**Factory Setting:**	10.0 s
Properties:			
Access Groups via HMI:	BASIC		

Description:
Acceleration time from zero to maximum speed (P0134).

P0101 – Deceleration Time

Adjustable Range:	0.1 to 999.0 s	**Factory Setting:**	10.0 s
Properties:			
Access Groups via HMI:	BASIC		

Description:
Deceleration time from maximum speed (P0134) to zero.

P0102 – Acceleration Time 2nd Ramp

Adjustable Range:	0.1 to 999.0 s	**Factory Setting:**	10.0 s
Properties:			
Access Groups via HMI:			

Description:

Acceleration time from zero to maximum speed (P0134) when the 2nd Ramp is active.

P0103 – Deceleration Time 2nd Ramp

Adjustable Range:	0.1 to 999.0 s	**Factory Setting:**	10.0 s
Properties:			
Access Groups via HMI:			

Description:

Deceleration time from maximum speed (P0134) to zero when the 2nd Ramp is active.

P0104 – S Ramp

Adjustable Range:	0 = Inactive 1 = Active	**Factory Setting:**	0
Properties:	cfg		
Access Groups via HMI:			

Description:

This parameter allows the inverter acceleration and deceleration ramps to have a non-linear profile, similar to an "S", aiming at reducing the mechanical shocks on the load, as shown in Figure 13.1 on page 13-2.

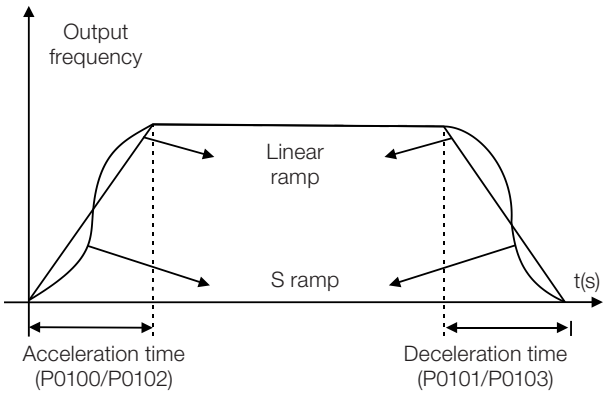

Figure 13.1: *S or Linear ramp*

P0105 – 1st / 2nd Ramp Selection

Adjustable Range:	0 = 1st Ramp 1 = 2nd Ramp 2 = DIx 3 = Serial/USB 4 = Reserved 5 = CO/DN/DP 6 = SoftPLC	**Factory Setting:**	2
Properties:			
Access Groups via HMI:	I/O		

Description:

It defines the command origin source to activate the 2nd Ramp.

Note: Parameter P0680 (Logical Status) indicates if the 2nd Ramp is active or not. For further information on this parameter, refer to Section 7.3 CONTROL WORD AND INVERTER STATUS on page 7-13.

> **NOTE!**
> The inactive status of any of the sources activates the 1st Ramp. The same occurs in option 2 (DIx) and when there is no digital input programd for the 2nd Ramp.

P0106 – Time of the 3rd Ramp

Adjustable Range:	0.1 to 999.0 s	**Factory Setting:**	5.0 s
Properties:			
Access Groups via HMI:			

Description:

Acceleration time from zero to maximum speed (P0134) or deceleration from maximum speed (P0134) to zero when the 3rd Ramp is active.

13.2 SLEEP MODE

The Sleep mode allows the inverter to turn off the motor when the speed reference is below the value programmed in P0217 for a period defined by P0218. In this way, the speed reference itself is able to turn off the motor, reducing the energy consumption. Besides, there is no need of digital command to drive the motor, that is, the reference also actuates as a logical command.

When the PID controller is active, the condition for the Sleep mode is incremented by P0535, besides parameters P0217 and P0218. This condition adds a minimum deviation criterion of the process variable in relation to the setpoint (error), ensuring that the PID keeps the process variable control over the Sleep mode. For further details, refer to Section 15.3 SLEEP MODE WITH PID on page 15-6.

The Sleep mode is signaled in P0006 equal to 7.

DANGER!
When in the Sleep mode, the motor can spin at any time considering the process conditions. If you wish to handle the motor or execute any kind of maintenance, power down the inverter.

P0217 – Sleep Frequency

Adjustable Range:	0.0 to 500.0 Hz	**Factory Setting:**	0.0 Hz
Properties:	cfg		
Access Groups via HMI:			

Description:

Parameter P0217 defines a value for the frequency reference, seeing that below this value the inverter may go into the Sleep mode depending also on P0218 and P0535.

The Sleep mode disables the inverter at moments in which the frequency reference is below P0217. That will happen after the time interval set in P0218.

If the frequency reference goes above P0217 again, the inverter will exit the Sleep mode automatically. However, if the inverter is in the PID mode in automatic, besides the previous condition, if the error in the PID is higher than the value programmed in P0535, the inverter will also exit the Sleep mode.

P0218 – Sleep Time

Adjustable Range:	0 to 999 s	**Factory Setting:**	0 s
Properties:			
Access Groups via HMI:			

Description:

The parameter P0218 establishes the time interval in which the Sleep mode conditions by P0217 and P0535 must remain stable. That prevents that momentary disturbances and oscillations incorrectly activate the Sleep state.

13.3 FLYING START / RIDE-THROUGH OR VVW

The Flying Start function allows driving a motor that is in free spinning, accelerating it from the rotation in which it is. The Ride-Through function allows recovering the inverter, with no locking by undervoltage, when there is an instant drop in the power supply.

Both functions have as a premise the special case in which the motor is spinning in the same direction and at a speed close to the speed reference, and, thus, immediately applying to the output the speed reference and increasing the output voltage in ramp, the slip and the starting torque are minimized.

P0320 – Flying Start (FS) / Ride-Through (RT)

Adjustable Range:	0 = Inactive 1 = Flying Start (FS) 2 = FS / RT 3 = Ride-Through (RT) 4 = FS for AI1 5 = FS for P0696	**Factory Setting:**	0
Properties:	cfg		
Access Groups via HMI:			

Description:

Parameter P0320 selects the use of the Flying Start and Ride-Through functions. More details in the following sections.

P0331 – Voltage Ramp for FS and RT

Adjustable Range:	0.2 to 60.0 s	**Factory Setting:**	2.0 s
Properties:	V/f, VVW		
Access Groups via HMI:			

Description:

This parameter determines the rising time of the output voltage during the execution of the Flying Start and Ride-Through functions.

13.3.1 Flying Start Function

In order to activate this function, just program P0320 in 1 or 2; thus the inverter will impose a fixed frequency at the start, defined by the speed reference, and apply the voltage ramp defined in parameter P0331. In this way, the start current is reduced. On the other hand, if the motor is at rest, the speed reference and the real speed of the motor are very different or the direction of rotation is inverted; the result in such cases may be worse than the conventional start without Flying Start.

The Flying Start function is applied on loads with high inertia or systems that require start with the motor spinning. Besides, the function may be deactivated dynamically by a digital input P0263 to P0270 programmed for "24 = Disable Flying Start". In this way, the user may activate the function in a convenient way according to the application.

13.3.2 Ride-Through Function

The Ride-Through function will disable the inverter output pulses (IGBT) as soon as the supply voltage reaches a value below the undervoltage value. A fault due to undervoltage (F0021) does not occur and the DC Link voltage will slowly drop until the supply voltage returns. In case it takes the supply voltage too long to return (over 2 seconds), the inverter may indicate F0021 (undervoltage on the DC Link). If the supply voltage returns before, the inverter will enable the pulses again, imposing the speed reference instantly (like in the Flying Start function) and making a voltage ramp with time defined by parameter P0331. Refer to Figure 13.2 on page 13-6.

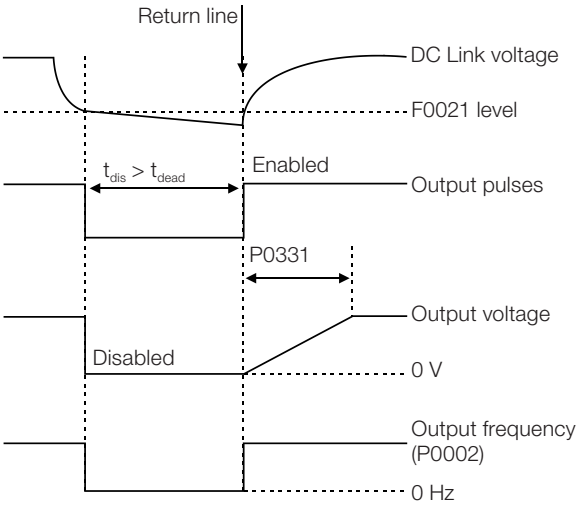

Figure 13.2: *Actuation of the Ride-Through function*

The Ride-Through function allows recovering the inverter without locking by undervoltage F0021 for momentary power supply drops. The time interval accepted during a fault is at most two seconds.

13.4 FLYING START / RIDE THROUGH TO THE VECTOR CONTROL

13.4.1 Vector Flying Start

13.4.1.1 P0202 = 3

The behavior of the Flying Start function (FS) in the sensorless mode during acceleration and reacceleration can be understood from the Figure 13.3 on page 13-8.

The Figure 13.3 on page 13-8 shows the behavior of the speed reference when the FS function is started with stopped motor shaft and small P0329 value (not optimized).

Operation analysis:

1. The frequency correspondent to the P0134 adjustment is applied, with approximately the motor nominal current (I/f control).
2. The frequency is reduced down to zero using the ramp given by: P0329 x P0412.
3. If the speed is not found during this frequency scan, a new scan in the opposite speed direction is initiated, in which the frequency goes from -P0134 to zero. After this second scan the FS is finished and the control mode changes to vector sensorless.

The Figure 13.3 on page 13-8 shows the speed reference when the FS function is initiated with the motor shaft already running in the desired direction, or with stopped shaft and an already optimized P0329.

Operation analysis:

1. The frequency correspondent to the P0134 adjustment is applied, with approximately the motor nominal current.
2. The frequency is reduced using the ramp given by: P0329 x P0412 until reaching the motor speed.
3. In this moment the control mode changes to vector sensorless.

NOTE!
In order that the motor speed is found in the first scan, proceed with the P0329 setting in the following manner:
1. Increase P0329 using 1.0 steps.
2. Enable the inverter and observe the motor shaft movement during the FS process.
3. If the shaft rotates in both directions, stop the motor and repeat the steps 1 and 2.

NOTE!
The used parameters are P0327 to P0329 and the not used ones are P0182, P0331 and P0332.

NOTE!
When the general enable command is activated, the motor magnetization will not occur.

NOTE!
For a better performance of the function, the activation of the braking without losses is recommended by setting the parameter P0185 according to the Table 12.9 on page 12-27.

P0327 – FS I/f Current Ramp

Adjustable Range:	0.000 to 1.000 s	**Factory Setting:**	0.070 s
Properties:	Sless		
Access Groups via HMI:			

Description:
It defines the time for the I/f current to change from 0 to the level used in the frequency sweep (f). It is determined by: P0327 = P0412/8.

P0328 – Flying Start Filter

Adjustable Range:	0.000 to 1.000 s	**Factory Setting:**	0.085 s
Properties:	Sless		
Access Groups via HMI:			

Description:
It establishes the time of permanence in the condition that indicates that the speed of the motor was found. It is defined by: P0328 = (P0412/8 + 0.015 s).

P0329 – FS I/f Frequency Ramp

Adjustable Range:	2.0 to 50.0	**Factory Setting:**	6.0
Properties:	Sless		
Access Groups via HMI:			

Description:

It defines the rate of frequency variation used in the motor speed search.

The frequency variation rate is determined by: (P0329 x P0412).

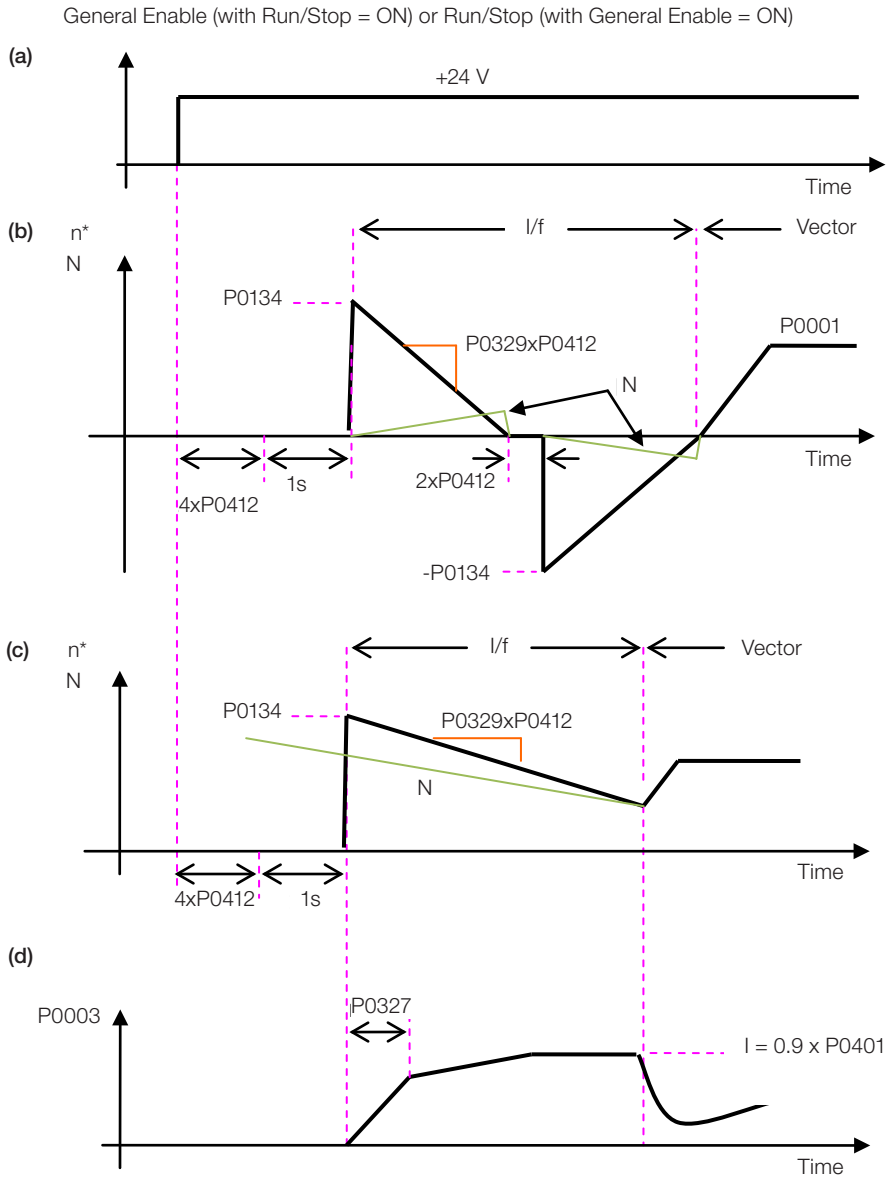

Figure 13.3: *(a) to (d) Influence of P0327 and P0329 during Flying Start (P0202 = 4)*

If it is wished to deactivate momentarily the Flying Start function, one can program one of the digital inputs P0263 to P0270 as 15 (Disab. FlyStart). Refer to Section 14.5 DIGITAL INPUTS on page 14-14.

13.4.2 P0202 = 4

During the time period when the motor is being magnetized, the identification of the motor speed occurs. Once the magnetization is finished, the motor will be operated starting from that speed until reaching the speed reference indicated in P0001.

The parameters P0327 to P0329, P0331 and P0332 are not used.

13.4.3 Vector Ride-Through

Different from the V/f and VVW modes, in the vector mode the Ride-Through function tries to regulate the DC Link voltage during the line failure. The energy necessary to keep the aggregate working is obtained from the motor kinetic energy (inertia) by means of its deceleration. Thus, at the line return the motor is reaccelerated to the speed defined by the reference.

After the line failure (t0), the DC Link voltage (Ud) starts diminishing according to a rate depending on the motor load condition, being able to reach the undervoltage level (t2) if the Ride-Through function is not working. The typical necessary time for this to occur, with rated load, is from a magnitude of 5 to 15 ms.

With the Ride-Through function active, the line loss is detected when the Ud voltage reaches a value below the "DC Link Power Loss" value (t1), defined at the parameter P0321. The inverter initiates a controlled deceleration of the motor immediately, regenerating energy to the DC Link in order to keep the motor operating with the Ud voltage regulated at the value "DC Link Ride-Through" (P0322).

In case that the line does not return, the aggregate remains in this condition the longest possible time (depends on the energetic balance) until undervoltage (F0021 in t5) occurs. If the line returns before the undervoltage occurrence (t3), the inverter will detect its return when the Ud voltage reaches the "DC Link Power Back" (t4) level, defined at the parameter P0323. The motor is then reaccelerated, following the adjusted ramp, from the actual speed value to the value defined by the speed reference (P0001) (refer to the Figure 13.4 on page 13-9).

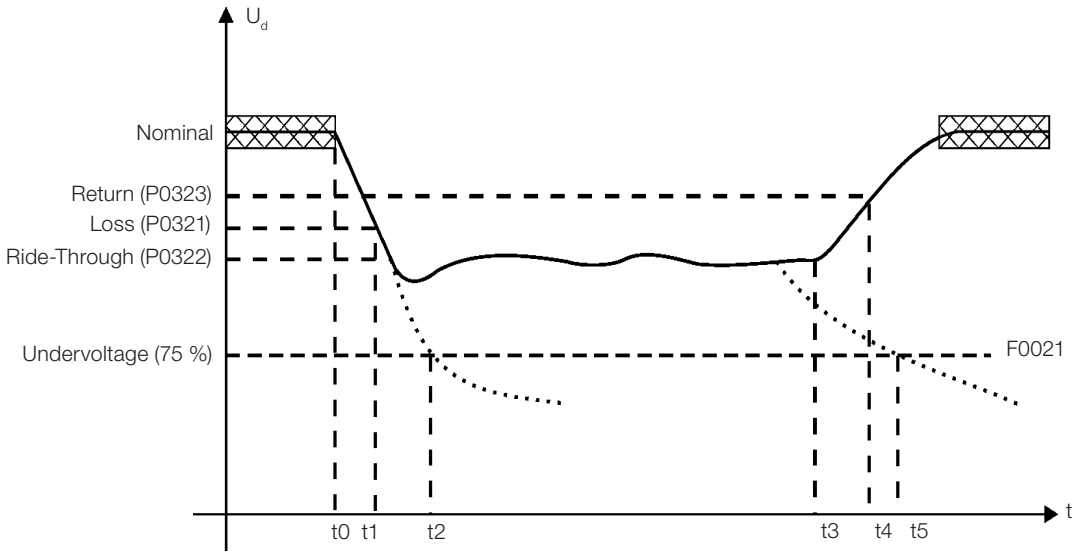

Figure 13.4: *Ride-Through function actuation in vector mode*

- t0 – line loss.
- t1 – line loss detection.
- t2 – undervoltage actuation (F0021 without Ride-Through).
- t3 – line return.
- t4 – line return detection.
- t5 – undervoltage actuation (F0021 with Ride-Through).

If the line voltage produces an Ud voltage between the values adjusted in P0322 and P0323, the fault F0150 may occur, the values of P0321, P0322 and P0323 must be readjusted.

NOTE!
When one of the functions, Ride-Through or Flying Start, is activated, the parameter P0357 (Line Phase Loss Time) is ignored, regardless of the adjusted time.

NOTE!
All the drive components must be dimensioned so as to withstand the transitory conditions of the application.

NOTE!
The Ride-Through function activation occurs when the power supply voltage is lower than the value (P0321/1.35). Ud = Vac x 1.35

P0321 – DC Link Power Loss

Adjustable Range:	178 a 770 V	**Factory Setting:**	252 V (P0296 = 0) 436 V (P0296 = 1) 436 V (P0296 = 2) 436 V (P0296 = 3) 436 V (P0296 = 4) 535 V (P0296 = 5) 535 V (P0296 = 6) 535 V (P0296 = 7)

P0322 – DC Link Ride-Through

Adjustable Range:	178 a 770 V	**Factory Setting:**	245 V (P0296 = 0) 423 V (P0296 = 1) 423 V (P0296 = 2) 423 V (P0296 = 3) 423 V (P0296 = 4) 423 V (P0296 = 5) 423 V (P0296 = 6) 423 V (P0296 = 7)

P0323 – DC Link Power Back

Adjustable Range:	178 a 770 V	**Factory Setting:**	267 V (P0296 = 0) 462 V (P0296 = 1) 462 V (P0296 = 2) 462 V (P0296 = 3) 462 V (P0296 = 4) 462 V (P0296 = 5) 462 V (P0296 = 6) 462 V (P0296 = 7)
Properties:	Vector		
Access Groups via HMI:			

Description:

P0321 - defines the U_d voltage level under which the line loss will be detected.

P0322 - defines the U_d voltage level that the inverter will try to keep regulated, so that the motor keeps operating.

P0323 - defines the U_d voltage level at which the inverter will identify the return of the line, and from where the motor must be reaccelerated.

NOTE!
These parameters work together with the parameters P0325 and P0326 for the Ride-Through in vector control.

P0325 – Ride-Through Proportional Gain

Adjustable Range:	0.0 to 63.9	**Factory Setting:**	22.8

P0326 – Ride-Through Integral Gain

Adjustable Range:	0.000 to 9.999	**Factory Setting:**	0.128
Properties:	Vector		
Access Groups via HMI:			

Description:

These parameters configure the vector mode Ride-Through PI controller, which is responsible for keeping the DC Link voltage at the level set in P0322.

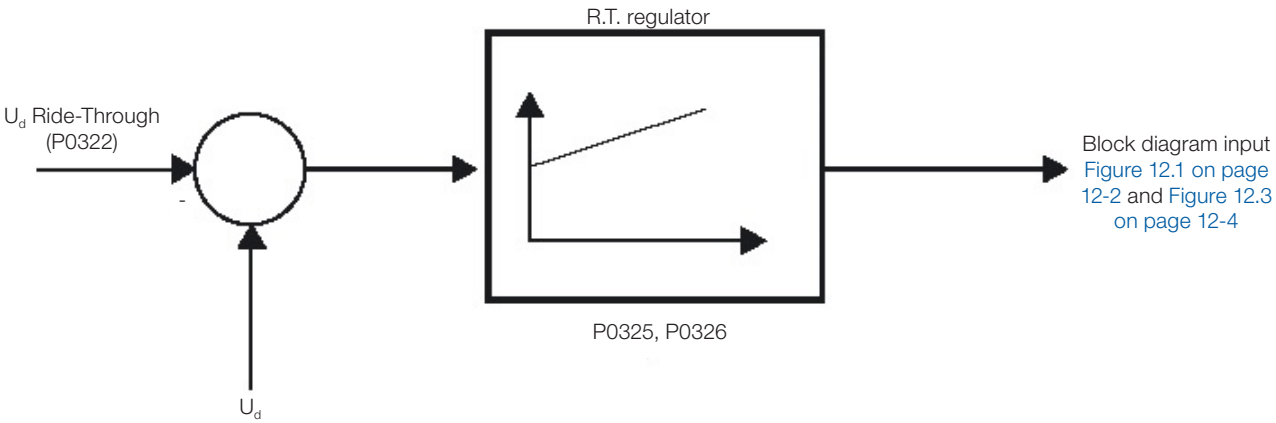

Figure 13.5: *Ride-Through PI controller*

Normally the factory settings for P0325 and P0326 are adequate for the majority of the applications. Do not change these parameters.

13.5 DC BRAKING

The DC Braking allows stopping the motor by applying direct current to it. The current applied at the DC Braking is proportional to the braking torque and may be set in P0302. It is set in percentage (%) of the inverter rated current considering the motor of power compatible with the inverter.

P0299 – DC Braking Time at Start

Adjustable Range:	0.0 to 15.0 s	**Factory Setting:**	0.0 s
Properties:	V/f, VVW, Sless		
Access Groups via HMI:			

Description:

DC Braking duration at the start.

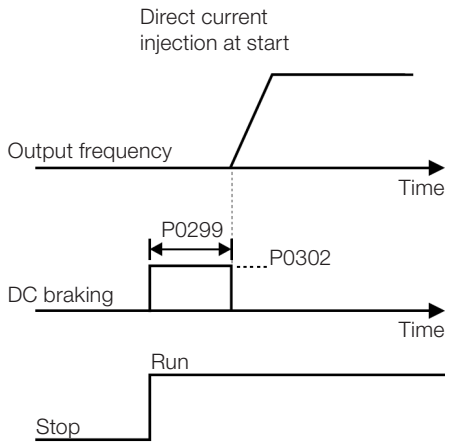

Figure 13.6: *DC Braking actuation at start*

P0300 – DC Braking Time at Stop

Adjustable Range:	0.0 to 15.0 s	**Factory Setting:**	0.0 s
Properties:	V/f, VVW, Sless		
Access Groups via HMI:			

Description:

DC Braking duration at the stop. Figure 13.7 on page 13-12 shows the braking behavior at the stop, where the dead time for the de-magnetization of the motor can be observed. This time is proportional to the speed at the moment of the injection of direct current.

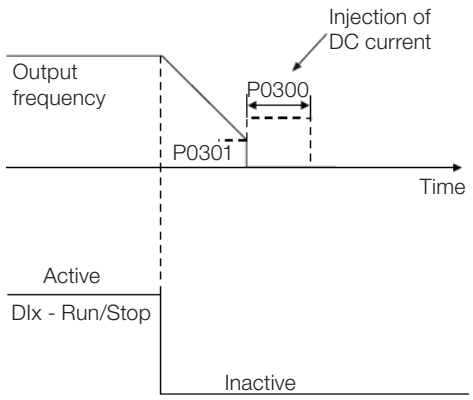

Figure 13.7: *Actuation of DC Braking*

During the braking process, if the inverter is enabled, the braking is interrupted and the inverter will start operating normally.

ATTENTION!
The DC Braking can continue acting even if the motor has already stopped. Be careful with the thermal dimensioning of the motor for short-period cyclic braking.

P0301 – Frequency to Begin DC Braking at Stop

Adjustable Range:	0.0 to 500.0 Hz	**Factory Setting:**	3.0 Hz
Properties:	V/f, VVW, Sless		
Access Groups via HMI:			

Description:

This parameter establishes the initial point to apply the DC Braking at the stop when the inverter is disabled by ramp, as per Figure 13.7 on page 13-12.

P0302 – Voltage Applied to the DC Braking

Adjustable Range:	0.0 to 100.0 %	**Factory Setting:**	20.0 %
Properties:	V/f, VVW		
Access Groups via HMI:			

Description:

This parameter sets the DC voltage (DC Braking torque) applied to the motor during the braking.

The setting must be done by gradually increasing the value of P0302, which varies from 0.0 to 100.0 % of the rated braking voltage, until obtaining the desired braking torque.

Parameter P0409 directly influences the braking torque, because the value of 100% in P0302 indicates a voltage source on the motor that results in the rated current of the inverter given by P0295.

NOTE!
Attention! A value too high in P0302 may cause overcurrent faults on the inverter and even damages to the connected motor by overcurrent on the windings.

13.6 AVOIDED FREQUENCY

This inverter function prevents the motor from operating permanently at frequency values in which, for example, the mechanical system goes into resonance (causing excessive vibration or noises).

P0303 – Skip Frequency 1

Adjustable Range:	0.0 to 500.0 Hz	**Factory Setting:**	20.0 Hz

P0304 – Skip Frequency 2

Adjustable Range:	0.0 to 500.0 Hz	**Factory Setting:**	30.0 Hz

P0306 – Skip Band

Adjustable Range:	0.0 to 25.0 Hz	**Factory Setting:**	0.0 Hz
Properties:			
Access Groups via HMI:			

Description:

The actuation of those parameters is done as presented in Figure 13.8 on page 13-14 below.

The passage by the avoided frequency band (2xP0306) is done through acceleration/deceleration ramp.

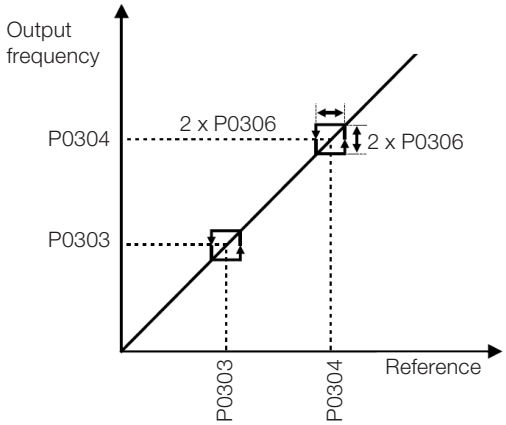

Figure 13.8: *Actuation of the avoided frequency*

14 DIGITAL AND ANALOG INPUTS AND OUTPUTS

This section presents the parameters to configure the CFW500 inputs and outputs. This configuration depends on the plug-in module, as per Table 14.1 on page 14-1.

Table 14.1: *I/O configurations of the CFW500*

Functions														Plug-in Module
DI	AI	ENC	AO	DOR	DOT	USB	CAN	RS-232	RS-485	Profibus	EtherNet	Sup 10 V	Sup 24 V	
4	1	-	1	1	1	-	-	-	1	-	-	1	1	CFW500-IOS
8	1	-	1	1	4	-	-	-	1	-	-	1	1	CFW500-IOD
6	3	-	2	1	3	-	-	-	1	-	-	1	1	CFW500-IOAD
5	1	-	1	4	1	-	-	-	1	-	-	1	1	CFW500-IOR
4	1	-	1	1	1	1	-	-	1	-	-	1	1	CFW500-CUSB
2	1	-	1	1	1	-	1	-	1	-	-	1	1	CFW500-CCAN
2	1	-	1	1	1	-	-	1	1	-	-	-	1	CFW500-CRS232
4	2	-	1	2	1	-	-	-	2	-	-	1	1	CFW500-CRS485
2	1	-	1	1	1	-	-	-	1	1	-	-	1	CFW500-CPDP
2	1	-	1	1	1	-	-	-	1	-	1	-	1	CFW500-CETH-IP CFW500-CEMB-TCP CFW500-CEPN-IO
5	1	1	1	3	1	-	-	-	1	-	-	-	1	CFW500 - ENC
7	-	1	-	3	1	-	-	-	1	-	-	-	1	CFW500 - ENC2

DI – Digital Input **DOR** – Relay Digital Output **AI** – Analog Input **AO** – Analog Output **DOT** – Transistor Digital Output

NOTE!
CFW500 HMI shows just the parameters related to the resources available in the plug-in module connected to the product.

14.1 ANALOG INPUTS

With the analog inputs, it is possible, for instance, to use an external speed reference or to connect a sensor in order to measure temperature (PTC). Details for those configurations are described in the parameters below.

P0018 – Analog Input Value AI1

P0019 – Analog Input Value AI2

P0020 – Analog Input Value AI3

Adjustable Range:	-100.0 to 100.0 %	**Factory Setting:**	
Properties:	ro		
Access Groups via HMI:	READ, I/O		

Description:

Those read-only parameters indicate the value of the analog inputs AI1, AI2 and AI3 in percentage of the full scale. The indicated values are those obtained after the offset action and multiplication by the gain. Check the description of parameters P0230 to P0245.

P0230 – Dead Zone of the Analog Inputs

Adjustable Range:	0 = Inactive 1 = Active	**Factory Setting:**	0
Properties:	cfg		
Access Groups via HMI:	I/O		

Description:

This parameter acts just for the analog inputs (AIx) programmed as frequency reference, and defines if the dead zone in those inputs is Active (1) or Inactive (0).

If the parameter is configured as Inactive (P0230 = 0), the signal in the analog inputs will actuate on the frequency reference from the minimum point (0 V / 0 mA / 4 mA or 10 V / 20 mA), and it will be directly related to the minimum speed set in P0133. Check Figure 14.1 on page 14-2.

If the parameter is set as Active (P0230 = 1), the signal in the analog inputs will have a dead zone, where the frequency reference remains at the Minimum Speed value (P0133), even with the variation of the input signal. Check Figure 14.1 on page 14-2.

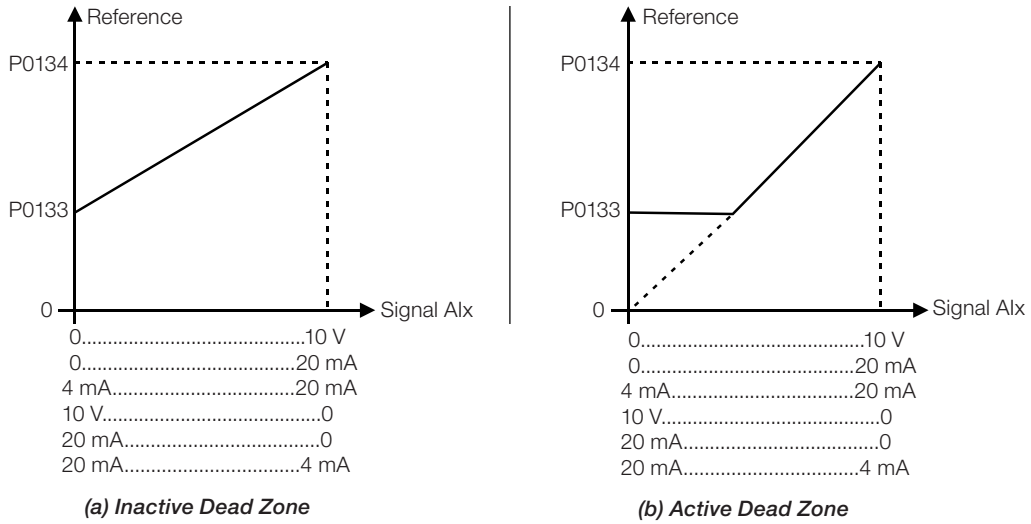

Figure 14.1: *(a) and (b) Actuation of the analog inputs with inactive dead zone and active dead zone*

In the case of analog inputs AI3 set for -10 V to +10 V (P0243 = 4), we will have curves similar to Figure 14.1 on page 14-2; except that when AI3 is negative, the direction of rotation will be the opposite.

P0231 – AI1 Signal Function

P0236 – AI2 Signal Function

P0241 – AI3 Signal Function

Adjustable Range:	0 = Speed Reference 1 = Not Used 2 = Maximum Torque Current 3 = Not Used 4 = PTC 5 and 6 = Not Used 7 = Use of SoftPLC 8 = Function 1 of Application 9 = Function 2 of Application 10 = Function 3 of Application 11 = Function 4 of Application 12 = Function 5 of Application 13 = Function 6 of Application 14 = Function 7 of Application 15 = Function 8 of Application	**Factory Setting:**	0
Properties:	cfg		
Access Groups via HMI:	I/O		

Description:

These parameters define the analog input functions.

When the 0 option is selected (Speed Reference), the analog inputs can provide the reference for the motor, subject to the specified limits (P0133 and P0134) and to the action of the ramps (P0100 to P0103). However, in order to do so, it is also necessary to configure parameters P0221 and/or P0222 by selecting the use of the desired analog input. For further detail, refer to the description of those parameters in Chapter 7 LOGICAL COMMAND AND SPEED REFERENCE on page 7-1.

Option 4 (PTC) configures the input to monitor the motor temperature by means of the reading of a PTC-type sensor when there is one installed on the motor. For further details on this function refer to Section 17.3 MOTOR OVERTEMPERATURE PROTECTION (F0078) on page 17-4.

Option 7 (SoftPLC) configures the input to be used by the programming done in the memory area reserved for the SoftPLC function. For further details, refer to the SoftPLC user's manual.

P0232 – AI1 Input Gain

P0237 – AI2 Input Gain

P0242 – AI3 Input Gain

Adjustable Range:	0.000 to 9.999	**Factory Setting:**	1.000

P0234 – AI1 Input Offset

P0239 – AI2 Input Offset

P0244 – AI3 Input Offset

Adjustable Range:	-100.0 to 100.0 %	**Factory Setting:**	0.0 %

P0235 – AI1 Input Filter

P0240 – AI2 Input Filter

P0245 – AI3 Input Filter

Adjustable Range:	0.00 to 16.00 s	**Factory Setting:**	0.00 s
Properties:			
Access Groups via HMI:	I/O		

Description:

Each analog input of the inverter is defined by the steps of calculation of signal, OFFSET, gain, filter, function and value AIx, as shown in Figure 14.2 on page 14-4:

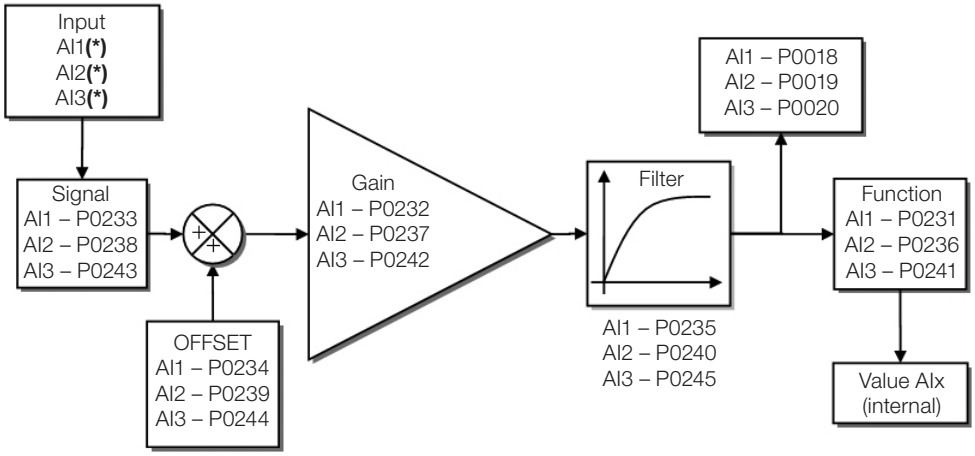

(*) Control terminals available in the plug-in module.

Figure 14.2: *Block diagram of the analog inputs - AIx*

P0233 – AI1 Input Signal

P0238 – AI2 Input Signal

Adjustable Range:	0 = 0 to 10 V / 20 mA 1 = 4 to 20 mA 2 = 10 V / 20 mA to 0 3 = 20 to 4 mA	**Factory Setting:**	0

P0243 – AI3 Input Signal

Adjustable Range:	0 = 0 to 10 V / 20 mA 1 = 4 to 20 mA 2 = 10 V / 20 mA to 0 3 = 20 to 4 mA 4 = -10 to +10 V	**Factory Setting:**	0
Properties:			
Access Groups via HMI:	I/O		

Description:

These parameters configure the signal type (if current or voltage) that will be read in each analog input, as well as its variation range. Note that only AI3 has option 4 (-10 V to +10 V). In options 2 and 3 of the parameters, the reference is inverted, that is, we have the maximum speed with the minimum signal in the AIx.

In the CFW500 plug-in module, DIP Switch S1:1 in ON configures input AI1 for signal in current. In the other cases, refer to the installation, configuration and operation guide of the plug-in used. Table 14.2 on page 14-5 below summarizes the configuration and equation of the analog inputs.

Table 14.2: *AIx configuration and equation*

Signal	P0233, P0238	P0243	DIP Switch	Equation AIx(%)
0 to 10 V	0	0	OFF	$AIx = \left(\frac{AIx(V)}{10\ V} \times (100\ \%) + OFFSET\right) \times GAIN$
0 to 20 mA	0	0	ON	$AIx = \left(\frac{AIx(mA)}{20\ mA} \times (100\ \%) + OFFSET\right) \times GAIN$
4 to 20 mA	1	1	ON	$AIx = \left(\left(\frac{(AIx(mA) - 4\ mA)}{16\ mA}\right)_0^1 \times (100\ \%) + OFFSET\right) \times GAIN$
10 to 0 V	2	2	OFF	$AIx = 100\ \% - \left(\frac{AIx(V)}{10\ V} \times (100\ \%) + OFFSET\right) \times GAIN$
20 to 0 mA	2	2	ON	$AIx = 100\ \% - \left(\frac{AIx(mA)}{20\ mA} \times (100\ \%) + OFFSET\right) \times GAIN$
20 to 4 mA	3	3	ON	$AIx = 100\ \% - \left(\left(\frac{(AIx(mA) - 4\ mA)}{16\ mA}\right)_0^1 \times (100\ \%) + OFFSET\right) \times GAIN$
-10 to +10 V	-	4	OFF	$AIx = \left(\frac{AIx(V)}{10\ V} \times (100\ \%) + OFFSET\right) \times GAIN$

For example: AIx = 5 V, OFFSET = -70.0 %, Gain = 1.000, with signal of 0 to 10 V, that is, AIx_{ini} = 0 and AIx_{FE} = 10.

$$AIx(\%) = \left(\frac{5}{10} \times (100\ \%) + (70\ \%)\right) \times 1 = -20.0\ \%$$

Another example: AIx = 12 mA, OFFSET = -80.0 %, Gain = 1.000, with signal of 4 to 20 mA, that is, AIx_{ini} = 4 and AIx_{FE} = 16.

$$AIx(\%) = \left(\frac{12 - 4}{16} \times (100\ \%) + (-80\ \%)\right) \times 1 = -30.0\ \%$$

AIx' = -30.0 % means that the motor will spin counterclockwise with a reference in module equal to 30.0 % of P0134 if the signal AIx function is "Speed Reference".

In the case of filter parameters (P0235, P0240 and P0245), the value set corresponds to the time constant used to filter the input signal read. Therefore, the filter response time is around three times the value of this time constant.

14.2 ANALOG OUTPUTS

The analog outputs (AOx) are configured by means of three types of parameters: function, gain and signal, as per block diagram of Figure 14.3 on page 14-6.

The standard CFW500-IOS plug-in module has just the analog output AO1, but the CFW500-IOAD plug-in provides one more analog output AO2.

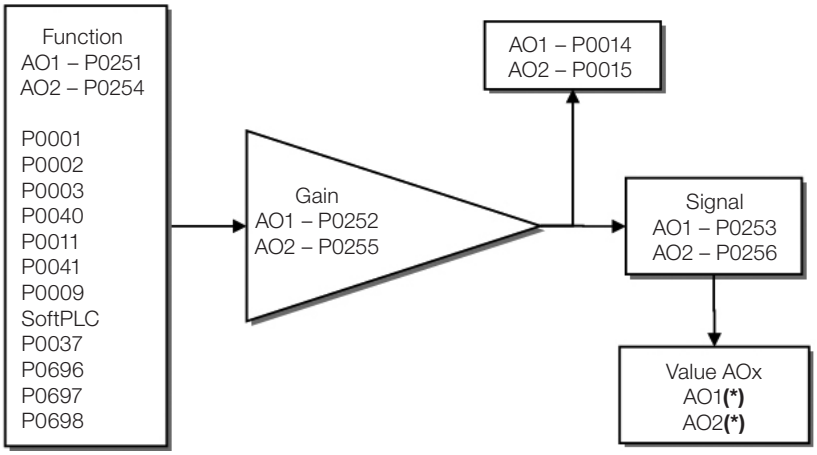

(*) Control terminals available in the plug-in module.

Figure 14.3: *Block diagram of analog outputs – AOx*

P0014 – Analog Output AO1 Value

P0015 – Analog Output AO2 Value

Adjustable Range:	0.0 to 100.0 %	**Factory Setting:**	
Properties:	ro		
Access Groups via HMI:	READ, I/O		

Description:

Those read-only parameters indicate the value of the analog outputs AO1 and AO2 in percentage of the full scale. The indicated values are those obtained after the multiplication by the gain. Check the description of parameters P0251 to P0256.

P0251 – AO1 Output Function

P0254 – AO2 Output Function

Adjustable Range:	0 = Speed Reference 1 = Not Used 2 = Real Speed 3 = Torque Current Reference 4 = Torque Current 5 = Output Current 6 = Process Variable 7 = Active Current 8 = Output Power 9 = PID Setpoint 10 = Torque Current >0 11 = Motor Torque 12 = SoftPLC 13 to 15 = Not Used 16 = Motor Ixt 17 = Not Used 18 = Value of P0696 19 = Value of P0697 20 = Value of P0698 21 = Function 1 of Application 22 = Function 2 of Application 23 = Function 3 of Application 24 = Function 4 of Application 25 = Function 5 of Application 26 = Function 6 of Application 27 = Function 7 of Application 28 = Function 8 of Application	**Factory Setting:**	P0251 = 2 P0254 = 5
Properties:			
Access Groups via HMI:	I/O		

Description:

These parameters set the analog output functions, according to function and scale presented in Table 14.3 on page 14-7.

Table 14.3: *Full scale of analog outputs*

Function	Description	Full Scale
0	Speed reference at the ramp input P0001	P0134
2	Effective speed at the inverter output (P0005)	P0134
3	Torque Current Ref	P0169(+) or P0170(-)
4	Torque Current	P0169(+) or P0170(-)
5	Total output current in RMS	2xP0295
6	PID process variable	P0528
7	Active current	2xP0295
8	Output Power	1.5 x √3 x P0295 x P0296
9	PID set point	P0528
10	Torque Current > 0	P0169(+) or P0170(-)
11	Torque on the motor in rela-tion to the rated torque	200 %
12	SoftPLC scale for the analog output	32767
16	Ixt overload of the motor (P0037)	100 %
18	Value of P0696 for analog output AOx	32767
19	Value of P0697 for analog output AOx	32767
20	Value of P0698 for analog output AOx	32767
21 a 28	Value defined by the SoftPLC application on the WLP	32767

P0252 – AO1 Output Gain

P0255 – AO2 Output Gain

Adjustable Range:	0.000 to 9.999	**Factory Setting:**	1.000
Properties:			
Access Groups via HMI:	I/O		

Description:

It determines the analog output gain according to the equation of Table 14.3 on page 14-7.

P0253 – AO1 Output Signal

P0256 – AO2 Output Signal

Adjustable Range:	0 = 0 to 10 V 1 = 0 to 20 mA 2 = 4 to 20 mA 3 = 10 to 0 V 4 = 20 to 0 mA 5 = 20 to 4 mA	**Factory Setting:**	0
Properties:			
Access Groups via HMI:	I/O		

Description:

These parameters configure if the analog output signal will be in current or voltage with direct or reverse reference. Besides setting those parameters, it is also necessary to position the DIP switches. In the standard CSP500 plug-in module, the DIP switch S1:2 in ON configures the analog output in voltage. In the other cases, refer to the installation, configuration and operation guide of the plug-in used.

Table 14.4 on page 14-8 below summarizes the configuration and equation of the analog outputs, where the relationship between the analog output function and the full scale is defined by P0251, as per Table 14.3 on page 14-7.

14

Table 14.4: *Characteristic configuration and equations of the AOx*

Signal	P0253	P0256	DIP Switch	Equation
0 to 10 V	0	0	ON	$AOx = \left(\frac{FUNCTION}{Scale} \times GAIN\right)_0^1 \times 10\ V$
0 to 20 mA	1	1	OFF	$AOx = \left(\frac{FUNCTION}{Scale} \times GAIN\right)_0^1 \times 20\ mA$
4 to 20 mA	2	2	OFF	$AOx = \left(\frac{FUNCTION}{Scale} \times GAIN\right)_0^1 \times 16\ mA + 4\ mA$
10 to 0 V	3	3	ON	$AOx = 10\ V - \left(\frac{FUNCTION}{Scale} \times GAIN\right)_0^1 \times 10\ V$
20 to 0 mA	4	4	OFF	$AOx = 20\ mA - \left(\frac{FUNCTION}{Scale} \times GAIN\right)_0^1 \times 20\ mA$
20 to 4 mA	5	5	OFF	$AOx = 20\ mA - \left(\frac{FUNCTION}{Scale} \times GAIN\right)_0^1 \times 16\ mA$

14.3 FREQUENCY INPUT

A frequency input consists of a fast digital input able to convert the frequency of the pulses in the input into a proportional signal with 10-bit resolution. After the conversion, this signal is used as an analog signal for speed reference, process variable, use of SoftPLC, etc.

According to the block diagram of Figure 14.4 on page 14-9, the signal in frequency is converted into a digital quantity in 10 bits by means of the block "calc. Hz/%", where parameters P0248 and P0250 define the input signal frequency band, while parameter P0022 shows the frequency of the pulses in Hz. From this conversion step, the signal in frequency receives a treatment similar to that of a regular analog input; compare to Figure 14.2 on page 14-4.

NOTE!
The frequency input signal at DI2 must be NPN regardless the setting in P0271 and it must not exceed the limit of 20 kHz.

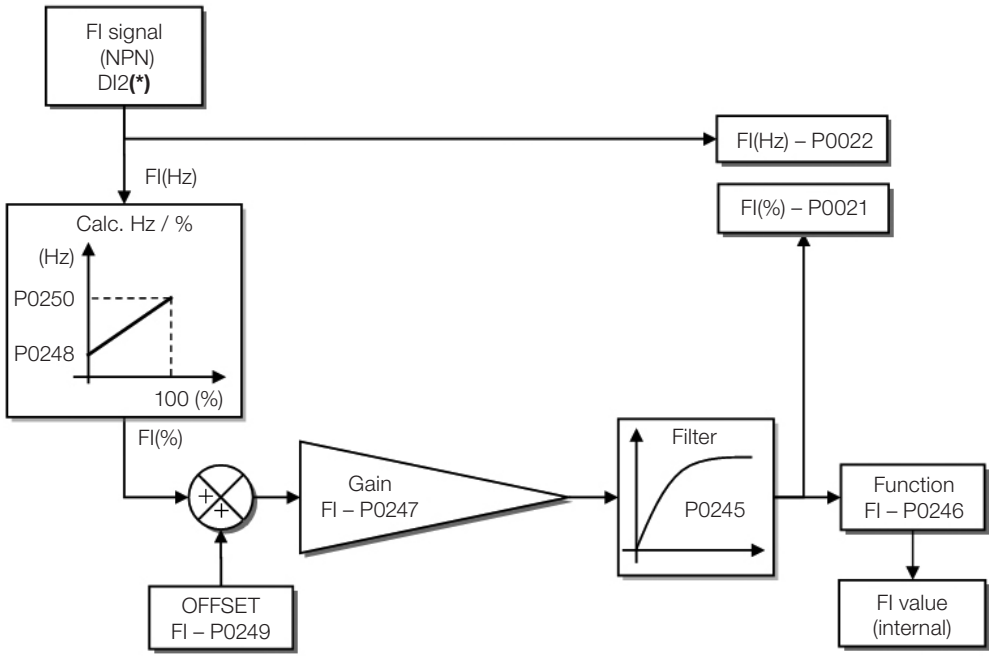

(*) Control terminal available in the plug-in module.

Figure 14.4: *Block diagram of frequency input – FI (DI2)*

Digital input DI2 is pre-defined for frequency input with operating capacity in a wide band from 10 to 20.000 Hz.

The frequency input filter is the same as the one used for input AI3, that is, parameter P0245.

P0021 – Value of Frequency Input FI in %

Adjustable Range:	-100.0 to 100.0 %	**Factory Setting:**	
Properties:	ro		
Access Groups via HMI:	READ, I/O		

Description:

This read-only parameter indicates the value of the frequency input in percentage of full scale.

The indicated values are those obtained after the offset action and multiplication by the gain. Check the description of parameters P0247 to P0250.

P0022 – Value of Frequency Input FI in Hz

Adjustable Range:	0 to 20000 Hz	**Factory Setting:**	
Properties:	ro		
Access Groups via HMI:	READ, I/O		

Description:

Value in hertz of the frequency input FI.

NOTE!
The operation of parameters P0021 and P0022, as well as of the frequency input, depends on the activation of P0246.

P0246 – Frequency Input FI

Adjustable Range:	0 = Inactive 1 = Active	**Factory Setting:**	0
Properties:			
Access Groups via HMI:	I/O		

Description:

When in "1" this parameter activates the frequency input, making the digital input DI2 function in P0264 be ignored, as well as the value of Bit "1" of P0012 is maintained in "0". On the other hand, when in "0" the frequency input is inactive keeping parameters P0021 and P0022 in zero.

P0247 – Input Gain in Frequency FI

Adjustable Range:	0.000 to 9.999	**Factory Setting:**	1.000

P0248 – Minimum Frequency Input FI

Adjustable Range:	10 to 20000 Hz	**Factory Setting:**	10 Hz

P0249 – Input Offset in Frequency FI

Adjustable Range:	-100.0 to 100.0 %	**Factory Setting:**	0.0 %

P0250 – Maximum Frequency Input FI

Adjustable Range:	10 to 20000 Hz	**Factory Setting:**	10000 Hz
Properties:			
Access Groups via HMI:	I/O		

Description:

Those parameters define the behavior of the frequency input according to the equation:

$$FI = \left(\left(\frac{FI(Hz) - P0248}{P0250 - P0248} \right)_0^1 x\ (100\ \%) + P0249 \right) x\ P0247$$

Parameters P0248 and P0250 determine the operation range of the frequency input(FI), while parameters P0249 and P0247 determine the offset and gain, respectively. For example, FI = 5000 Hz, P0248 = 10 Hz, P0250 = 10000 Hz, P0249 = -70.0 % and P0247 = 1.000, thus:

$$FI = \left(\left(\frac{5000 - 10}{10000 - 10} \right)_0^1 x\ (100\ \%) - 70\ \% \right) x\ 1.000 = 20.05\ \%$$

The value FI = -20.05 % means that the motor will spin in the opposite direction with a reference in module equal to 20.0 % of P0134.

When P0246 = 1, the digital input DI2 is pre-defined for frequency input, regardless the value of P0264, with operating capacity in the band from 10 to 20.000 Hz in 10 Vpp.

The time constant of the digital filter for the frequency input is shared with the analog input AI3 through parameter P0245.

14.4 FREQUENCY OUTPUT

Like the frequency input is implemented in the digital input DI2, the frequency output is fixed to the transistor digital output DO2.

The configuration and resources available in the frequency output are basically the same as those of analog outputs, as shown in Figure 14.5 on page 14-11.

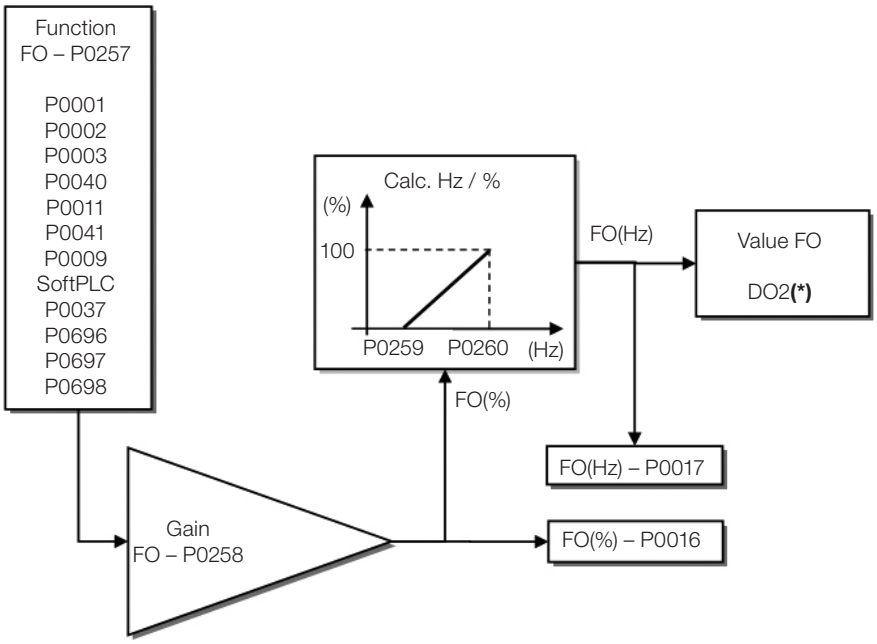

(*) Control terminal available in the plug-in module.

Figure 14.5: *Block diagram of the output in frequency FO (DO2)*

P0016 – Frequency Output Value FO in %

Adjustable Range:	0.0 to 100.0 %	**Factory Setting:**	
Properties:	ro		
Access Groups via HMI:	READ, I/O		

Description:

The percentage value of the output frequency FO. This value is given in relation to the range defined by P0259 and P0260.

P0017 – Frequency Output Value FO in Hz

Adjustable Range:	0 to 20000 Hz	**Factory Setting:**	
Properties:	ro		
Access Groups via HMI:	READ, I/O		

Description:

The value in hertz of the output frequency FO.

P0257 – Frequency Output Function FO

Adjustable Range:	0 = Speed Reference 1 = Not Used 2 = Real Speed 3 and 4 = Not Used 5 = Output Current 6 = Process Variable 7 = Active Current 8 = Not Used 9 = PID Setpoint 10 = Not Used 11 = Motor Torque 12 = SoftPLC 13 and 14 = Not Used 15 = Disable FO 16 = Motor Ixt 17 = Not Used 18 = Value of P0696 19 = Value of P0697 20 = Value of P0698 21 = Function 1 of Application 22 = Function 2 of Application 23 = Function 3 of Application 24 = Function 4 of Application 25 = Function 5 of Application 26 = Function 6 of Application 27 = Function 7 of Application 28 = Function 8 of Application	**Factory Setting:**	15
Properties:			
Access Groups via HMI:	I/O		

Description:

This parameter sets the frequency output function similarly to the setting of the analog outputs, like function and scale present in Table 14.5 on page 14-13.

The transistor digital output DO2 function is defined by P0276 when the frequency output function is inactive, that is, P0257 = 15. However, any other option of P0257 and the digital output DO2 becomes the frequency output ignoring the digital output function set in P0276.

Table 14.5: *Full scale of frequency output*

Function	Description	Full Scale
0	Speed reference in the ramp input (P0001)	P0134
2	Real speed in the inverter output (P0002)	P0134
5	Total output current in RMS	2xP0295
6	PID process variable	P0528
7	Active current	2xP0295
9	PID Setpoint	P0528
11	Motor torque in relation to rated torque	200.0 %
12	SoftPLC scale for frequency output	32767
15	Inactive frequency output - DO2 is digital output	-
16	Motor overload Ixt (P0037)	100 %
18	Value of P0696 for analog output AOx	32767
19	Value of P0697 for analog output AOx	32767
20	Value of P0698 for analog output AOx	32767
21 to 28	Defined value SoftPLC application on WLP	32767

P0258 – Frequency Output Gain FO

Adjustable Range:	0.000 to 9.999	**Factory Setting:**	1.000

P0259 – Minimum Frequency Output FO

Adjustable Range:	10 to 20000 Hz	**Factory Setting:**	10 Hz

P0260 – Maximum Frequency Output FO

Adjustable Range:	10 to 20000 Hz	**Factory Setting:**	10000 Hz
Properties:			
Access Groups via HMI:	I/O		

Description:

Gain, minimum and maximum values for frequency output FO.

14.5 DIGITAL INPUTS

In order to use the digital inputs, the CFW500 features up to eight ports, depending on the plug-in module connected to the product. Check Table 14.1 on page 14-1.

Below are described the parameters for digital inputs.

P0271 – Digital Input Signal

Adjustable Range:	0 = (DI1...DI8) NPN 1 = (DI1) - PNP 2 = (DI1...DI2) - PNP 3 = (DI1...DI3) - PNP 4 = (DI1...DI4) - PNP 5 = (DI1...DI5) - PNP 6 = (DI1...DI6) - PNP 7 = (DI1...DI7) - PNP 8 = (DI1...DI8) - PNP	**Factory Setting:**	0
Properties:	cfg		
Access Groups via HMI:	I/O		

Description:

It configures the default for the digital input signal, that is, NPN and the digital input is activated with 0 V, PNP and the digital input is activated with +24 V.

P0012 – Status of Digital Inputs DI8 to DI1

Adjustable Range:	Bit 0 = DI1 Bit 1 = DI2 Bit 2 = DI3 Bit 3 = DI4 Bit 4 = DI5 Bit 5 = DI6 Bit 6 = DI7 Bit 7 = DI8	**Factory Setting:**	
Properties:	ro		
Access Groups via HMI:	READ, I/O		

Description:

Using this parameter, it is possible to view the status of the product digital inputs, according to the plug-in module connected. Refer to parameter P0027 in Section 6.1 INVERTER DATA on page 6-1.

The P0012 value is indicated in hexadecimal, where each bit of the number indicates the status of a digital input, that is, if Bit_0 is "0", DI1 is inactive; if Bit_0 is "1", DI1 is active, and so on, up to DI8. Besides, the determination of DIx active or inactive takes into account the signal type in the DIx defined by P0271.

The activation of DIx depends on the signal in the digital input and on P0271, as per Table 14.6 on page 14-14, which lists parameters P0271, threshold voltage for activation "V_{TH}", threshold voltage for deactivation "V_{TL}" and status indication of DIx in parameter P0012.

Table 14.6: *Values of P0012 for x from 1 to 8*

Setting in P0271	Threshold Voltage in DIx	P0012
DIx = NPN	$V_{TL} > 9$ V	$Bit_{x-1} = 0$
	$V_{TH} < 5$ V	$Bit_{x-1} = 1$
DIx = PNP	$V_{TL} < 17$ V	$Bit_{x-1} = 0$
	$V_{TH} > 20$ V	$Bit_{x-1} = 1$

NOTE!
Parameter P0012 requires the user to know the conversion between binary and hexadecimal numerical system.

P0263 – Function of Digital Input DI1

P0264 – Function of Digital Input DI2

P0265 – Function of Digital Input DI3

P0266 – Function of Digital Input DI4

P0267 – Function of Digital Input DI5

P0268 – Function of Digital Input DI6

P0269 – Function of Digital Input DI7

P0270 – Function of Digital Input DI8

Adjustable Range:	0 to 46	**Factory Setting:**	P0263 = 1 P0264 = 8 P0265 = 20 P0266 = 10 P0267 = 0 P0268 = 0 P0269 = 0 P0270 = 0
Properties:	cfg		
Access Groups via HMI:	I/O		

Description:

These parameters allow configuring the digital input function, according to the adjustable range listed in Table 14.7 on page 14-16.

Table 14.7: Digital input functions

Value	Description	Dependence
0	Not Used	-
1	Run/Stop command	P0224 = 1 or P0227 = 1
2	General Enable command	P0224 = 1 or P0227 = 1
3	Quick Stop command	P0224 = 1 or P0227 = 1
4	Forward Run command	P0224 = 1 or P0227 = 1
5	Reverse Run command	P0224 = 1 or P0227 = 1
6	Three Wires Start command	P0224 = 1 or P0227 = 1
7	Three Wires Stop command	P0224 = 1 or P0227 = 1
8	Clockwise Rotation Direction	P0223 = 4 or P0226 = 4
9	Local/Remote selection	P0220 = 4
10	JOG command	P0225 = 2 or P0228 = 2
11	Electronic Potentiometer: Accelerate E.P	P0221 = 7 or P0222 = 7
12	Electronic Potentiometer: Decelerate E.P	P0221 = 7 or P0222 = 7
13	Multispeed reference	P0221 = 8 or P0222 = 8
14	2nd Ramp selection	P0105 = 2
15 to 17	Not Used	-
18	No External Alarm	-
19	No External Fault	-
20	Fault Reset	Active fault
21	Use of SoftPLC	SoftPLC user prog.
22	PID Manual/Automatic	P0203 = 1 or 2
23	Not Used	-
24	Disable Flying Start	P0320 = 1 or 3
25	DC Link Regulator	-
26	Lock Programming	-
27	Load User 1	Inverter disabled
28	Load User 2	Inverter disabled
29	PTC - motor thermal sensor	-
30 and 31	Not Used	-
32	Multispeed reference with 2nd Ramp	P0221 = 8 or P0222 = 8 and P0105 = 2
33	Electronic Potentiometer: Accelerate E.P. with 2nd Ramp	P0221 = 7 or P0222 = 7 and P0105 = 2
34	Electronic Potentiometer: Decelerate E.P. with 2nd Ramp	P0221 = 7 or P0222 = 7 and P0105 = 2
35	Forward Run command with 2nd Ramp	P0224 = 1 or P0227 = 1 and P0105 = 2
36	Reverse Run command with 2nd Ramp	P0224 = 1 or P0227 = 1 and P0105 = 2
37	Accelerate E.P. /Turn ON	P0224 = 1 or P0227 = 1 P0221 = 7 or P0222 = 7
38	Decelerate E.P. /Turn OFF	P0224 = 1 or P0227 = 1 P0221 = 7 or P0222 = 7
39	Function 1 Application	-
40	Function 2 Application	-
41	Function 3 Application	-
42	Function 4 Application	-
43	Function 5 Application	-
44	Function 6 Application	-
45	Function 7 Application	-
46	Function 8 Application	-

a) RUN/STOP

It enables or disables the motor rotation through the acceleration and deceleration ramp.

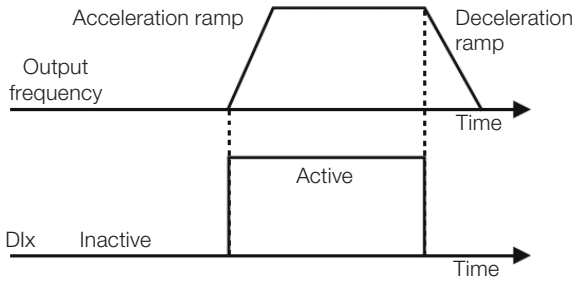

Figure 14.6: *Example of the Run/Stop function*

b) GENERAL ENABLE

It enables the motor rotation through the acceleration ramp and disables it by cutting off the pulses immediately; the motor stops by inertia.

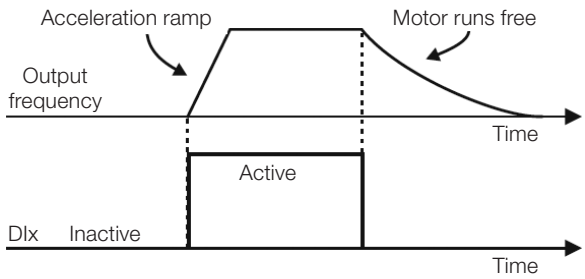

Figure 14.7: *Example of the General Enable function*

c) QUICK STOP

When inactive, it disables the inverter by the 3rd Ramp by P0106.

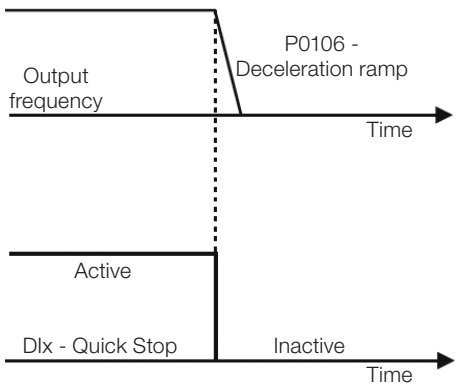

Figure 14.8: *Example of the Quick Stop function*

d) FORWARD RUN/REVERSE RUN

This command is the combination of Run/Stop with Direction of Rotation.

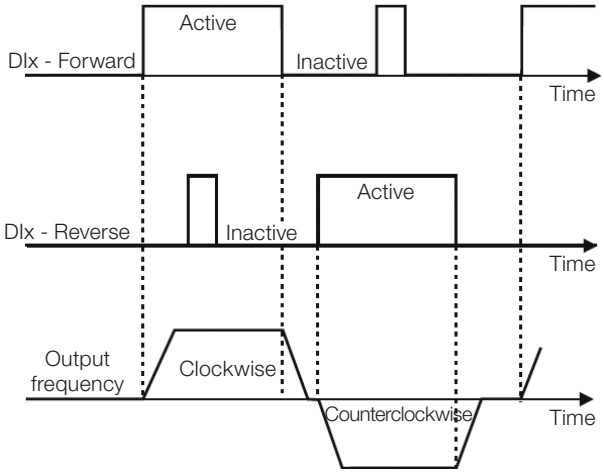

Figure 14.9: *Example of the Forward Run/Reverse Run function*

e) THREE-WIRE START / STOP

This function tries to reproduce the activation of a three-wire direct start with retention contact, where a pulse in the DIx-Start enables the motor spin while the DIx-Stop is active.

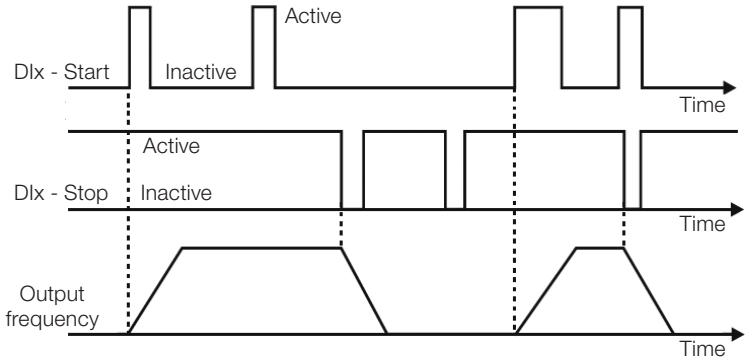

Figure 14.10: *Example of the three-wire Start / Stop function*

NOTE!
All the digital inputs set for General Enable, Quick Stop, Forward Run/Reverse Run and Start/Stop must be in the **"Active"** state so that the inverter is able to enable the motor spin.

f) DIRECTION OF ROTATION

If the DIx is Inactive, the Direction of Rotation is clockwise; otherwise, the Direction of Rotation will be counterclockwise.

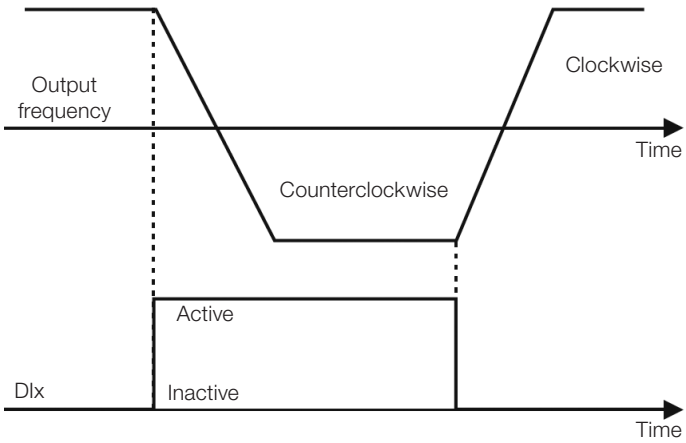

Figure 14.11: *Example of the Direction of Rotation function*

g) LOCAL / REMOTE

If DIx is inactive, the Local command is selected; otherwise, the Remote command is selected.

h) JOG

The JOG command is the combination of the Run / Stop command with a speed reference via parameter P0122.

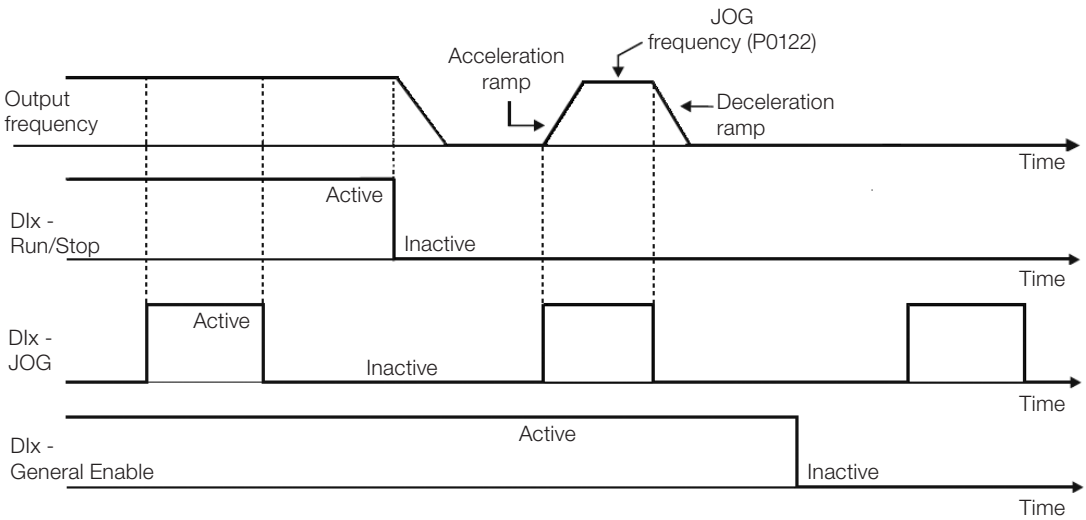

Figure 14.12: *Example of the JOG function*

i) ELECTRONIC POTENTIOMETER (E.P.)

The E.P. function enables the setting of the speed via digital inputs programmed for Accelerate E.P. and Decelerate E.P. The basic principle of this function is similar to the sound volume and intensity control in electronic appliances.

The operation of the E.P. function is also affected by the behavior of parameter P0120, that is, if P0120 = 0, the E.P. reference initial value will be P0133; if P0120 = 1, the initial value will be the last reference value before the disabling of the inverter, and if P0120 = 2, the initial value will be the reference via P0121 keys.

Besides, the E.P. reference can be reset by activating both Accelerate E.P. and Decelerate E.P. inputs when the inverter is disabled.

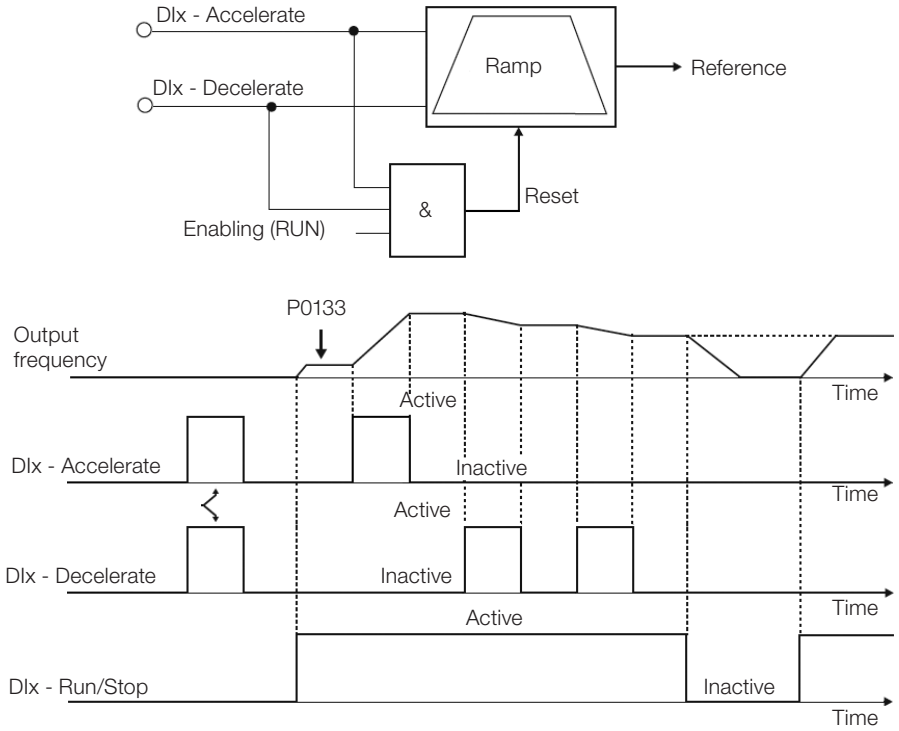

Figure 14.13: *Example of the Electronic Potentiometer (E.P.) function*

j) MULTISPEED

The Multispeed reference, as described in Item 7.2.3 Speed Reference Parameters on page 7-10, allows selecting one among eight reference levels pre-defined in parameters P0124 to P0131 by the combination of up to three digital inputs. For further details, refer to Chapter 7 LOGICAL COMMAND AND SPEED REFERENCE on page 7-1.

k) 2nd RAMP

If DIx is inactive, the inverter uses the default ramp by P0100 and P0101; otherwise, it will use the 2nd Ramp by P0102 and P0103.

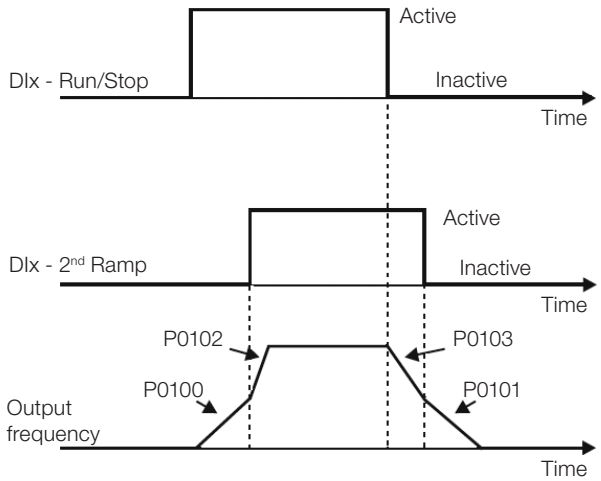

Figure 14.14: *Example of the 2nd Ramp function*

l) NO EXTERNAL ALARM

If DIx is inactive, the inverter will activate the external alarm A0090.

m) NO EXTERNAL FAULT

If DIx is inactive, the inverter will activate the external fault F0091. In this case, the PWM pulses are disabled immediately.

n) FAULT RESET

Once the inverter is in the fault status and the fault origin condition is no longer active, the fault status will be reset in the transition of the DIx programmed for this function.

o) USE OF SoftPLC

Only the digital input status DIx in P0012 is used for the SoftPLC functions.

p) MAN/AUTO PID

It allows selecting the inverter speed reference when the PID function is active (P0203 = 1, 2 or 3) between the reference defined by P0221/P0222 (Manual mode - DIx Inactive) and the reference defined by the PID controller output (Automatic mode - DIx Active). For further details, refer to Chapter 15 PID CONTROLLER on page 15-1.

q) DISABLE FLYING START

It allows the DIx, when active, to disable the action of the Flying Start function preset in parameter P0320 = 1 or 2. When the DIx is inactive, the Flying Start function operates normally again. Refer to Section 13.3 FLYING START / RIDE-THROUGH or VVW on page 13-4.

r) LOCK PROG

When the DIx input is active, parameters cannot be changed, no matter the values set in P0000 and P0200. When the DIx input is Inactive, the modification of parameters will depend on the values set in P0000 and P0200.

s) LOAD Us. 1

This function allows selecting the user 1 memory, process similar to P0204 = 7, with the difference that the user is loaded from a transition in the DIx programmed for this function.

t) LOAD Us. 2

This function allows selecting the user 2 memory, process similar to P0204 = 8, with the difference that the user is loaded from a transition in the DIx programmed for this function.

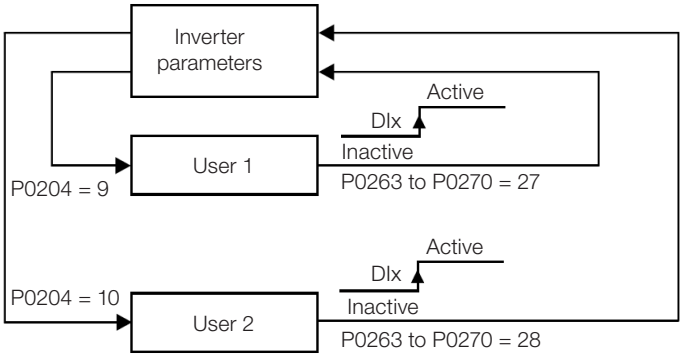

Figure 14.15: *Block diagram of the functions us. 1 and us. 2*

u) PTC

The DIx digital inputs can read the resistance of a triple thermistor according to resistance values specified in the DIN 44081 and 44082 standards, as well as IEC 34-11-2. To do so, just connect the triple thermistor between the DIx input and the GND (0 V), besides programming the referred DIx for PTC (29).

The PTC thermistor can be used in any DIx, except in the DI2, which has a different input circuit for frequency input. Therefore, if the DI2 input is programmed for PTC (P0264 = 29), the inverter goes into the config (CONF) status.

NOTE!
The PTC input via DIx digital input does not detect short-circuits in the thermistor, but this resource is available via analog input. Refer to Section 17.3 MOTOR OVERTEMPERATURE PROTECTION (F0078) on page 17-4.

v) MULTISPEED, ELECTRONIC POTENTIOMETER, FORWARD RUN/REVERSE RUN WITH 2ND RAMP

It combines the Multispeed, E.P. and Forward Run/Reverse Run with 2nd Ramp primary functions in the same DIx digital input.

w) ACCELERATE E.P. - TURN ON / DECELERATE E.P. - TURN OFF

It consists of the Electronic Potentiometer function with capacity to enable the inverter by means of a pulse at the start, and a pulse for the stop when the output speed is minimum (P0133).

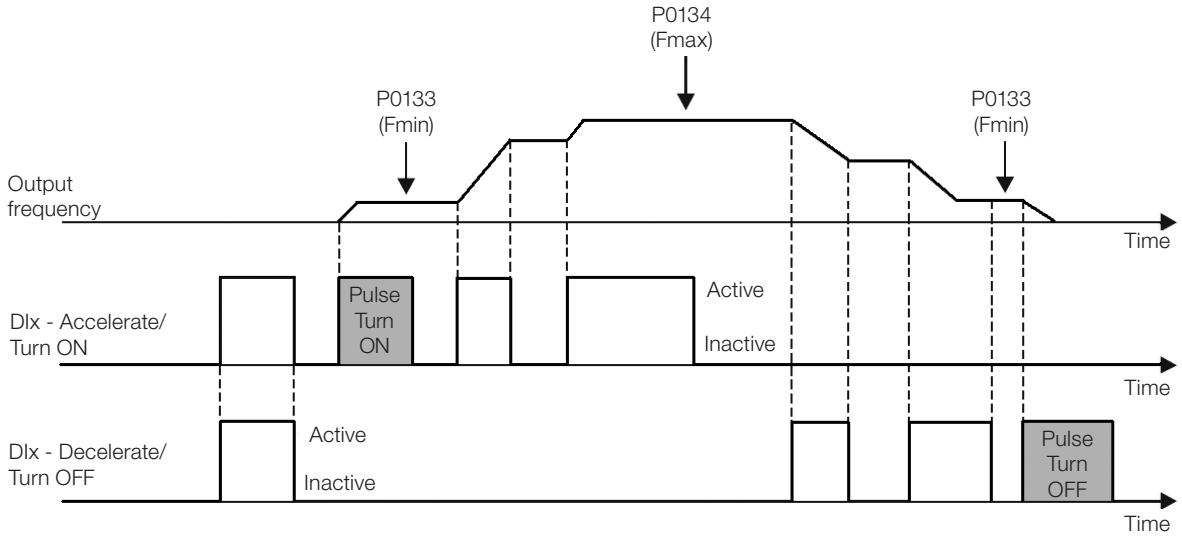

Figure 14.16: *Example of the Accelerate Turn ON / Decelerate Turn OFF*

14.6 DIGITAL OUTPUTS

The CFW500 can operate up to five digital outputs according to the selected interface plug-in module; refer to Table 14.1 on page 14-1.

The DO1 digital output is always relay, while DO2 is always transistor; the other outputs can be relay or transistor according to the plug-in module. On the other hand, the digital output parameter configuration makes no distinction in this aspect, as detailed description below. Besides, the transistor digital outputs are always NPN, that is, in open collector (sink).

P0013 – Digital Output Status DO5 to DO1

Adjustable Range:	Bit 0 = DO1 Bit 1 = DO2 Bit 2 = DO3 Bit 3 = DO4 Bit 4 = DO5	**Factory Setting:**
Properties:	ro	
Access Groups via HMI:	READ, I/O	

Description:

By using this parameter, it is possible to view the CFW500 digital output status.

The value of P0013 is indicated in hexadecimal, where each bit indicates the status of a digital output, that is, if the Bit_0 is "0", DO1 is inactive; if the Bit_0 is "1", DO1 is active, and so on up to DO5. Therefore, DOx active (1) means closed transistor or relay, inactive (0) means open transistor or relay.

NOTE!
Parameter P0013 requires the user to know the conversion between binary and hexadecimal numerical system.

P0275 – DO1 Output Function

P0276 – DO2 Output Function

P0277 – DO3 Output Function

P0278 – DO4 Output Function

P0279 – DO5 Output Function

Adjustable Range:	0 to 44	**Factory Setting:**	P0275 = 13 P0276 = 2 P0277 = 0 P0278 = 0 P0279 = 0
Properties:			
Access Groups via HMI:	I/O		

Description:

These parameters define the DOx digital output function, as per Table 14.8 on page 14-24.

Table 14.8: *Digital output functions*

Value	Function	Description
0	Not Used	Digital output inactive
1	F* > Fx	Active when the speed reference F* (P0001) is greater than Fx (P0288)
2	F > Fx	Active when output frequency F (P0002) is greater than Fx (P0288)
3	F < Fx	Active when output frequency F (P0002) is smaller than Fx (P0288)
4	F = F*	Active if the output frequency F (P0002) is equal to reference F* (P0001) (ramp end)
5	Reserved	Digital output inactive
6	Is > Ix	Active if the output current Is (P0003) > Ix (P0290)
7	Is < Ix	Active if the output current Is (P0003) < Ix (P0290)
8	Torque > Tx	Active if the motor torque T (P0009) > Tx (P0293)
9	Torque < Tx	Active if the motor torque T (P0009) < Tx (P0293)
10	Remote	Active if the command is the Remote condition (REM)
11	Run	Active if the motor is running (active output PWM pulses) RUN status
12	Ready	Active if the inverter is ready for enabling
13	No Fault	Active if the inverter has no fault
14	No F0070	Active if the inverter has no overcurrent fault (F0070)
15	Not Used	Digital output inactive
16	No F0021/22	Active if the inverter has no overvoltage or undervoltage fault (F0022 or F0021)
17	Not Used	Digital output inactive
18	No F0072	Active if the inverter has no motor overload fault (F0072)
19	4-20 mA OK	Active if AIx is set for 4 to 20 mA (P0233 and/or P0238 and/or P0243 equal to 1 or 3) and AIx < 2 mA
20	Value of P0695	Status of the bits 0 to 4 of P0695 activate digital outputs DO1 to DO5, respectively
21	Clockwise	Active if the inverter direction of rotation is clockwise
22	Proc. V. > VPx	Active if process variable (P0040) > VPx (P0533)
23	Proc. V. < VPx	Active if process variable (P0040) < VPx (P0533)
24	Ride-Through	Active if the inverter is executing the Ride-Through function
25	Pre-Charge OK	Active if the pre-charge relay of the DC Link capacitors was already activated
26	With Fault	Active if the inverter has a fault
27	Not Used	Digital output inactive
28	SoftPLC	Activates DOx output according to the SoftPLC memory area. Read the SoftPLC user's manual
29 a 34	Not Used	Digital output inactive
35	No Alarm	Active when the inverter has no alarm
36	No Fault and Alarm	Active when the inverter has no alarm and no fault
37	Function 1 Application	
38	Function 2 Application	
39	Function 3 Application	
40	Function 4 Application	
41	Function 5 Application	
42	Function 6 Application	
43	Function 7 Application	
44	Function 8 Application	

P0287 – Fx Hysteresis

Adjustable Range:	0.0 to 10.0 Hz	**Factory Setting:**	0.5 Hz

P0288 – Fx Speed

Adjustable Range:	0.0 to 500.0 Hz	**Factory Setting:**	3.0 Hz
Properties:			
Access Groups via HMI:	I/O		

Description:

These parameters set the hysteresis and actuation level on the Fx output frequency signal and on the F* ramp input of the relay digital outputs. In this way, the relay commutation levels are "P0288 + P0287" and "P0288 - P0287".

P0290 – Ix Current

Adjustable Range:	0.0 to 200.0 A	**Factory Setting:**	$1.0xI_{nom}$
Properties:			
Access Groups via HMI:	I/O		

Description:

Current level to activate the relay output in the Is>Ix (6) and Is<Ix (7) functions. The actuation occurs on a hysteresis with upper level in P0290 and lower by: P0290 - 0.05xP0295, that is, the equivalent value is Amperes for 5 % of P0295 below P0290.

P0293 – Tx Torque

Adjustable Range:	0 to 200 %	**Factory Setting:**	100 %
Properties:			
Access Groups via HMI:	I/O		

Description:

Torque percentage level to activate the relay output in the Torque > Tx (8) and Torque < Tx (9) functions. The actuation occurs on a hysteresis with upper level in P0293 and lower by: P0293 - 5 %. This percentage value is related to the motor rated torque matched to the inverter power.

15 PID CONTROLLER

15.1 DESCRIPTIONS AND DEFINITIONS

The CFW500 features the PID Controller function, which can be used to control a closed loop process. This function plays the role of a proportional, integral and differential controller which overrides the inverter regular speed control. Figure 15.1 on page 15-2 presents a scheme of the PID controller.

The process control is done by varying the motor speed, maintaining the process variable value (the one you wish to control) at the desired value, which is set in the reference input (setpoint).

Application examples:

- Flow or pressure control in a pipeline.
- Temperature of a furnace or oven.
- Chemical dosage in tanks.

The example below defines the terms used by the PID controller:

An electric pump in a water pumping system where the pressure must be controlled at the pump outlet pipe. A pressure transducer is installed on the pipe and provides an analog feedback signal to the CFW500 that is proportional to the water pressure. This signal is called process variable and can be viewed in parameter P0040. A setpoint is programmed on the CFW500 via HMI (P0525) or via speed references as per Section 7.2 SPEED REFERENCE on page 7-7. The setpoint is the value desired for the water pressure regardless the variations in demand of the system output.

NOTE!
When the setpoint is defined by a speed reference, the input unit in Hz is converted into the equivalent percentage value of P0134.

The CFW500 will compare the setpoint (SP) to the process variable (VP) and control the motor speed so as to try to nullify the error and keep the process variable equal to the setpoint. The setting of the gains P, I and D determine the behavior of the inverter to eliminate this error.

The input variable operating scale of the PID controller: process variable (P0040) and setpoint (P0041) are defined by P0528 and P0529. On the other hand, PID works internally with a percentage scale from 0.0 to 100.0 % according to P0525 and P0533. Refer to Figure 15.1 on page 15-2.

Both the setpoint (P0041) and the process variable (P0040) can be indicated via analog output AO1 or AO2, and it is necessary to set P0251 or P0254 in 9 or 6, respectively. The full scale given by P0528 corresponds to 10 V or 20 mA in the respective AOx output.

The PID or VP feedback can have as its source the analog inputs (P0203 = 1 for AI1 or P0203 = 2 for AI3) or the frequency input FI (P0203 = 3). In case the selected reference for the setpoint is the same input that is being used as PID feedback, the inverter will activate the Config Status. For further information, refer to Section 5.6 SITUATIONS FOR CONFIG STATUS on page 5-7.

Once the PID Controller is active (P0203) and in Automatic mode (DIx and Bit 14 of P0680), the CFW500 HMI, in the monitoring mode, will increment the value of P0525 in the main display by the keys ▲ and ▼. This indication of P0525 will depend on the band and shape as per P0528 and P0529. On the other hand if in Manual mode, the HMI will increment the value of P0121 in Hz.

The Manual / Automatic command is done by one of the digital inputs DI1 to DI8, and the value 22 = Manual / Automatic PID must be set in one of the respective parameters (P0263 to P0270). In case more than a DIx is programmed for this function, the inverter will activate the Config Status (Section 5.6 SITUATIONS FOR CONFIG STATUS on page 5-7). In case no digital input is set, the PID controller will work only in the Automatic mode.

If the input programmed with the Manual / Automatic function is active, the PID will operate in the Automatic mode, but if it is inactive, the PID will operate in the Manual mode. In this last case, the PID controller is disconnected and the ramp input becomes the setpoint directly (bypass operation).

The digital outputs DO1 to DO5 can be set to activate logics of comparison to the process variable (VP), and the value 22 (=VP>VPx) or 23 (=VP<VPx) must be programmed in one of the respective parameters (P0275 to P0279).

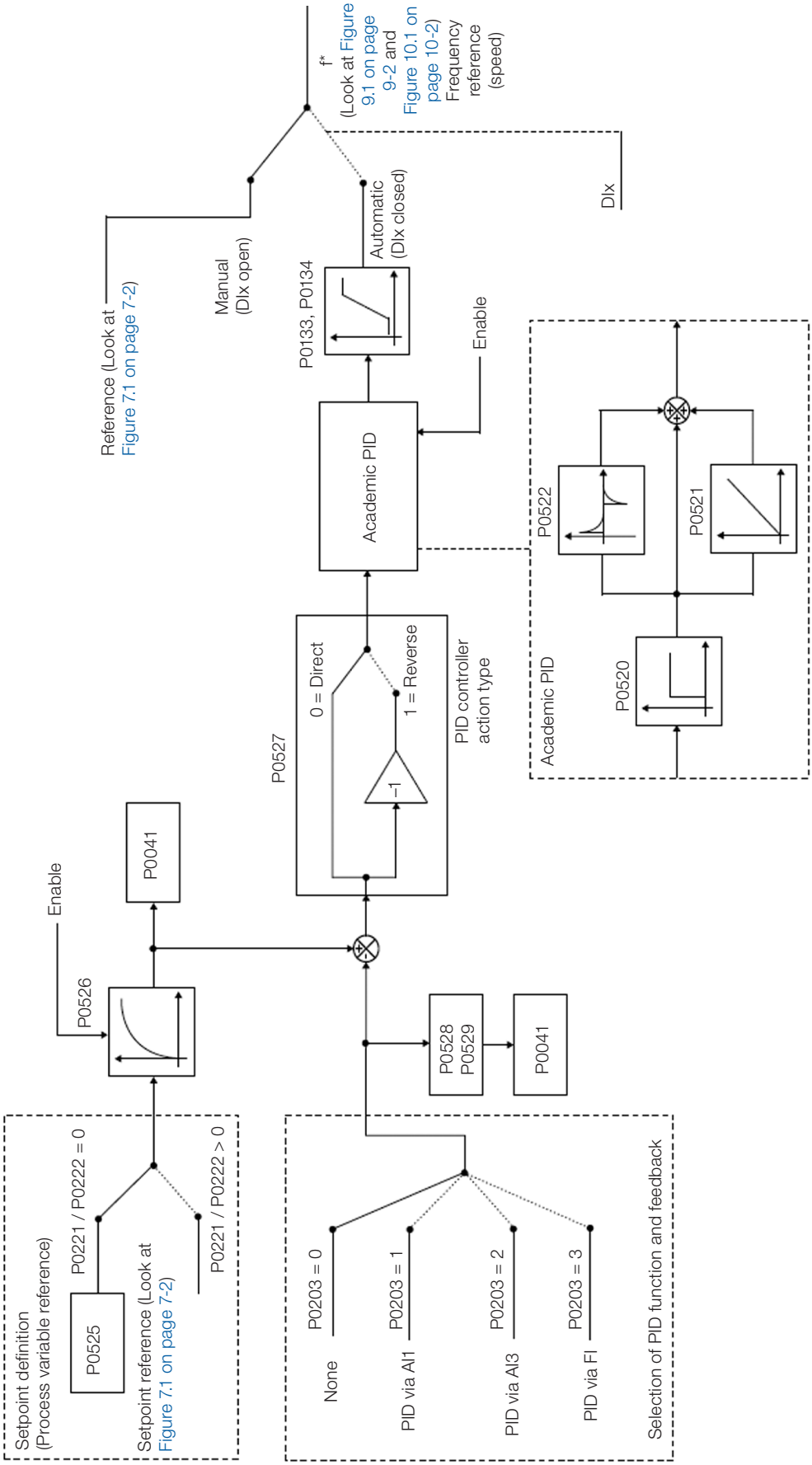

Figure 15.1: *Block diagram of the PID controller*

15.2 START-UP

Before describing in details the parameters related to this function, below we present the directions to perform the start-up of the PID controller.

NOTE!
For the PID function to operate properly, it is essential to check if the inverter is configured properly to drive the motor at the desired speed. To do so, check the following settings:
- Torque boosts (P0136 and P0137) and slip compensation (P0138) if in the control mode V/f (P0202 = 0).
- If the self-tuning was executed if in the control mode VVW (P0202 = 5).
- Acceleration and deceleration ramps (P0100 to P0103) and current limitation (P0135).
- Normally, the scalar control defined in the factory default (P0204 = 5 or 6) and with P0100 = P0101 = 1.0 s meets the requirements of most applications related to the PID controller.

Configuring the PID Controller

1. **Enable PID:**

   For the operation of the PID Controller application, it is necessary to set the parameter P0203 ≠ 0.

2. **Define the PID feedback:**

   The PID feedback (measurement of the process variable) is done via analog input AI1 (P0203 = 1), AI2 (P0203 = 2) or frequency input FI (P0203 = 3).

3. **Define the reading parameters of the HMI monitoring screen:**

   The monitoring mode of the CFW500 HMI can be configured to show the control variables of the PID controller in the numerical form. In the example below are shown the PID feedback or process variable, PID setpoint and motor speed.

   Example:

   a. Main display parameter to show the process variable:

   - Program P0205 in 40, which corresponds to parameter P0040 (PID Process Variable).
   - Program P0209 in 10 (%).
   - Program P0210 in 1 (wxy.z) – form of indication of PID variables).

   b. Secondary display parameter to show the PID setpoint:

   - Program P0206 in 41, which corresponds to parameter P0041 (PID Setpoint Variable).

   c. Bar parameter to show the motor speed:

   - Set P0207 to 2, which corresponds to parameter P0002 of the CFW500 inverter.
   - Program P0213 according to P0134 (if P0134 = 66.0 Hz, thus P0210 = 660).

4. **Set reference (setpoint):**

   The setpoint is defined similarly to the speed reference as per Section 7.2 SPEED REFERENCE on page 7-7, but instead of applying the value directly to the ramp input, it is applied to the PID input according to Figure 15.1 on page 15-2.

The PID operation internal scale is defined in percentage from 0.0 to 100.0 %, as well as the PID reference via keys in P0525 and via analog input. The other sources whose references are in another scale, such as the speed references like Multispeed and the 13-bit reference, are converted to this scale before the processing of the PID. The same occurs with parameters P0040 and P0041 which have their scale defined by P0528 and P0529.

5. Define digital input for the Manual / Automatic command:

In order to execute the Manual / Automatic command in the PID controller, it is necessary to define which digital input will execute this command. In order to do so, program one of the parameters P0263 to P0270 in 22.

Suggestion: program P0265 in 22 for the digital input DI3 to execute the Manual / Automatic command.

6. Define the action type of the PID controller:

The control action must be direct (P0527 = 0) when it is necessary that the motor speed be increased to increment the process variable. Otherwise, select reverse (P0527 = 1).

Examples:

a. Direct: Pump driven by the inverter filling the tank with the PID controlling its level. For the level (process variable) to increase, it is necessary that the flow increase, which is accomplished by increasing the speed of the motor.

b. Reverse: Fan driven by inverter cooling a refrigeration tower with PID controlling its temperature. If an increase in temperature is desired (process variable), it is necessary to reduce the ventilation by reducing the motor speed.

7. Adjust the PID feedback scale:

The transducer (sensor) to be used for the feedback of the process variable must have a full scale of at least 1.1 times the highest value you wish to control.

Example: if you wish to control a pressure in 20 bars, a sensor with full scale of at least 22 bars (1.1 x 20) must be chosen.

Once the sensor is defined, the type of signal to be read in the input must be selected (if current or voltage) and adjust the switch corresponding to the selection made.

In this sequence, we will assume that the sensor signal varies from 4 to 20 mA (configure P0233 = 1 and switch S1.1 = ON).

For the manipulated values to have physical meaning, the scale defined by P0528 and P0529 must be set according to the maximum reading value of the sensor in the same scale and unit. For example, for a pressure sensor from 0 to 4 bars, P0528 and P0529 can set the scale in 4.00 (400 and 2, respectively) or 4.000 (4000 and 3, respectively), for instance. Thus, the indications of setpoint (P0041) and VP (P0040) will comply with the application. Besides, the feedback gain and offset also affect the scale of the PID input variables when changed from the default and must be taken into account, but it is recommended to use the default values (unit gain and null offset).

Although P0528 and P0529 define a scale to indicate the variables of interest of the PID controller, the calculations are based on the scale of P0525 (0.0 to 100.0 %). Therefore, the threshold parameters of comparison of the relay output VPx (P0533) and wake up band (P0535) operate in percentage values of the sensor full scale, that is, 50.0 % are equivalent to 2.00 bars of pressure in the output.

8. Speed limits:

Set P0133 and P0134 within the operating range desired for the excursion of the PID output between 0 and 100.0 %. Like in the analog inputs, the PID output signal band can be adjusted to those limits without dead zone by parameter P0230; refer to Section 14.1 ANALOG INPUTS on page 14-1.

Putting into Operation

The HMI monitoring mode simplifies the PID operation when the PID setpoint is defined via keys in P0525, because, as it occurs with P0121, P0525 is incremented while P0041 is shown on the main display when the keys ▲ and ▼ are pressed. In this way, in the monitoring mode, it is possible to increment both P0121 when PID in Manual, and P0525 when PID in Automatic.

1. Manual operation (Manual/Automatic DIx inactive):

Keeping the DIx inactive (Manual), check the indication of the process variable on the HMI (P0040) based on an external measurement of the feedback signal (transducer) in AI1. Then, with the HMI in the monitoring mode, vary the speed reference in the keys ▲ and ▼ (P0121) until reaching the desired value of the process variable. Only then go to the Automatic mode.

> **NOTE!**
> If the setpoint is defined by P0525, the inverter will automatically set P0525 to the instant value of P0040 when the mode is changed from Manual to Automatic (since P0536 = 1). In this case, the commutation from Manual to Automatic is smooth (there is no sudden speed variation).

2. Automatic operation (Manual/Automatic DIx active):

With DIx active (Automatic) perform the dynamic setting of the PID controller, that is, of the proportional (P0520), integral (P0521) and differential (P0522) gains, checking if the regulation is being done correctly and the response is satisfactory. In order to do so, just compare the setpoint and the process variable and check if the values are close. Also check the motor dynamic response to the variations of the process variable.

It is important to point out that the setting of the PID gains is a step that requires some trial and error to reach the desired response time. If the system responds quickly and oscillates close to the setpoint, then the proportional gain is too high. If the system responds slowly and it takes a long time to reach the setpoint, the proportional gain is too low and must be increased. In case the process variable does not reach the required value (setpoint), then the integral gain must be adjusted.

As a summary of this sequence, below is presented a scheme of the connections to use the PID controller and also the setting of the parameters used in this example.

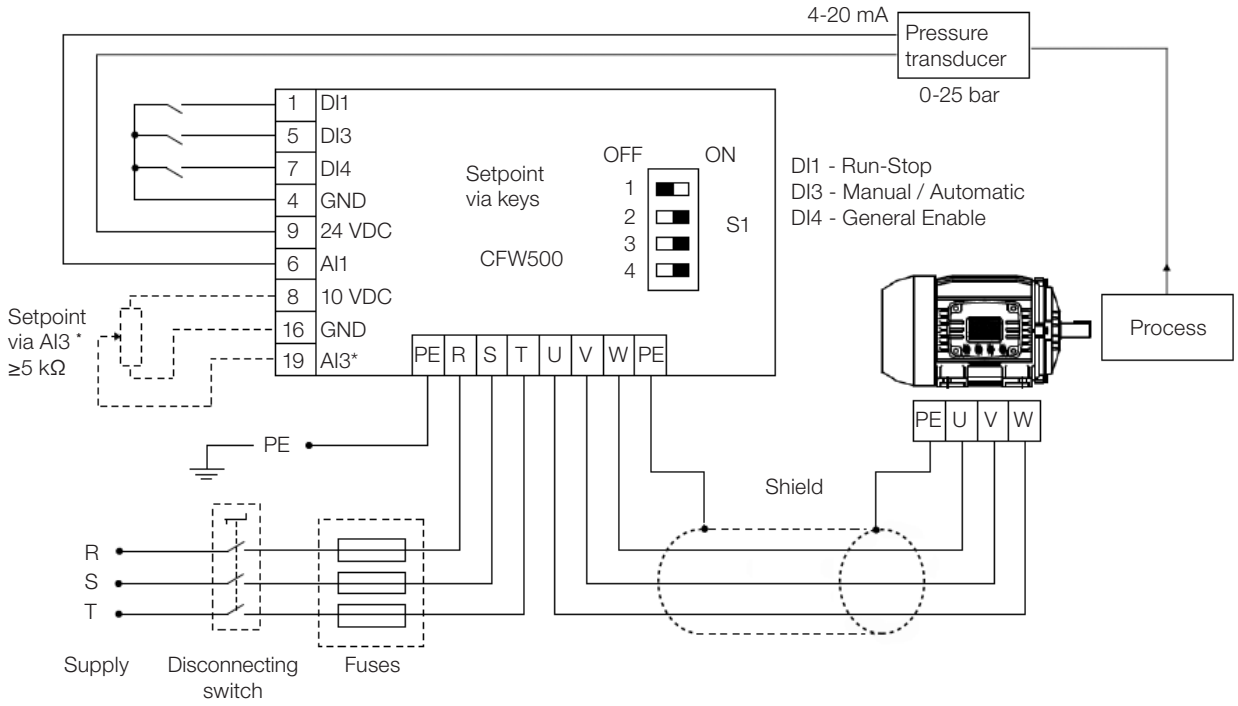

* Setpoint via AI3 only available in IOS plug-in module

Figure 15.2: *Example of application of the CFW500 PID controller*

Table 15.1: Setting of parameters for the example presented

Parameter	Description
P0203 = 1	Enables the PID controller via AI1 input (feedback)
P0205 = 40	Main display parameter selection (Process Variable)
P0206 = 41	Secondary display parameter selection (PID Setpoint)
P0207 = 2	Bar parameter selection (Motor Speed)
P0208 = 660	Reference scale factor
P0209 = 0	Reference engineering unit: none
P0213 = 660	Bar full scale
P0210 = 1	Reference indication form: wxy.z
P0220 = 1	Selection of LOC/REM source: operation in Remote condition
P0222 = 0	Selection of REM reference: HMI
P0226 = 0	Selection of remote direction of rotation: clockwise
P0228 = 0	Selection of remote JOG source: inactive
P0232 = 1.000	AI1 input gain
P0233 = 1	AI1 input signal: 4 to 20 mA
P0234 = 0.00 %	AI1 input offset
P0235 = 0.15 s	AI1 input filter
P0230 = 1	Dead zone (active)
P0536 = 1	P0525 automatic setting: active
P0227 = 1	Selection of remote Run/Stop (DIx)
P0263 = 1	DI1 input function: Run/Stop
P0265 = 22	DI3 input function: PID Manual/Automatic
P0266 = 2	DI4 input function: General Enable
P0527 = 0	PID controller action: direct
P0528 = 250	PID VP indication scale
P0529 = 1	PID VP indication form
P0525 = 20.0	PID setpoint
P0536 = 1	P0525 automatic setting: active
P0520 = 1.000	PID proportional gain
P0521 = 0.430	PID integral gain
P0522 = 0.000	PID differential gain

15.3 SLEEP MODE WITH PID

The Sleep mode is a useful resource to save on energy when the PID controller is used. In many applications with PID controller, energy is wasted by keeping the motor spinning at the minimum speed when, for example, the pressure or the level of a tank keeps rising.

In order to enable the Sleep mode just program the frequency to sleep in parameter P0217 the following way: P0133<P0217≤P0134. Besides that, parameter P0218 defines the time interval in which the input conditions in the sleep mode, by P0217 and P0535, must remain stable. See the detailed description of P0535 below.

DANGER!
When in the Sleep mode, the motor can spin at any time considering the process conditions. If you wish to handle the motor or execute any kind of maintenance, power down the inverter.

For further information on the configuration of the Sleep state, refer to Section 13.2 SLEEP MODE on page 13-3.

15.4 MONITORING MODE SCREEN

When the PID controller is used, the monitoring mode screen can be configured to show the main variables numerically with or without engineering units.

One example of HMI with this configuration can be observed in Figure 15.3 on page 15-7, where it is shown: the process variable, the setpoint, both without engineering unit (with reference at 25.0 bars) and the motor speed on the variable monitoring bar, according to the parameterization shown in Table 15.1 on page 15-6. For further information refer to Section 5.3 HMI on page 5-2.

On the screen of Figure 15.3 on page 15-7 is observed a setpoint of 20.0 bars on the secondary display, the process variable also at 20.0 bars on the main display and the output speed at 80 % on the bar.

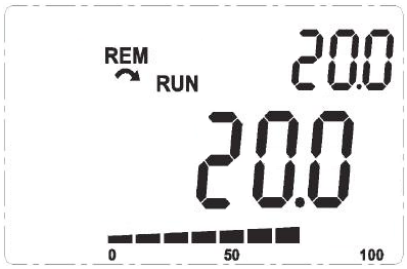

Figure 15.3: *Example of HMI in the monitoring mode to use the PID controller*

15.5 PID PARAMETER

Below are described in details the parameters related to the PID controller.

P0040 – PID Process Variable

Adjustable Range:	0.0 to 3000.0	**Factory Setting:**	
Properties:	ro		
Access Groups via HMI:	READ		

Description:

Read only parameter which presents in format (wxy.z), defined by P0529 and without engineering unit, the value of the process variable or feedback of the PID controller according to the scale defined in P0528.

P0041 – PID Setpoint Value

Adjustable Range:	0.0 to 3000.0	**Factory Setting:**	
Properties:	ro		
Access Groups via HMI:	READ		

Description:

Read only parameter which presents in format (wxy.z), defined by P0529 and without engineering unit, the value of the setpoint (reference) of the PID controller according to the scale defined in P0528.

P0203 – Special Function Selection

Adjustable Range:	0 = None 1 = PID via AI1 2 = PID via AI3 3 = PID via FI	**Factory Setting:**	0
Properties:	cfg		
Access Groups via HMI:			

Description:

It enables the special function PID Controller, when set P0203 ≠ 0. Besides, when you enable PID, you can select the feedback input (measurement of the process variable) of the controller. The PID feedback can be done via analog input (P0203 = 1 for AI1 or P0203 = 2 for AI3) or frequency input FI (P0203 = 3).

P0520 – PID Proportional Gain

P0521 – PID Integral Gain

P0522 – PID Differential Gain

Adjustable Range:	0.000 to 9.999	**Factory Setting:**	P0520 = 1.000 P0521 = 0.430 P0522 = 0.000
Properties:			
Access Groups via HMI:			

Description:

These parameters define the proportional, integral and differential gains of the function PID Controller and must be set according to the application which is being controlled.

Some examples of initial settings for some applications are presented in Table 15.2 on page 15-8.

Table 15.2: *Suggestion for setting the PID controller gains*

Magnitude	Gains		
	Proportional P0520	Integral P0521	Differential P0522
Pressure in pneumatic system	1.000	0.430	0.000
Flow in pneumatic system	1.000	0.370	0.000
Pressure in hydraulic system	1.000	0.430	0.000
Flow in hydraulic system	1.000	0.370	0.000
Temperature	2.000	0.040	0.000
Level	1.000	Read the next note	0.000

NOTE!

In the case of the level control, the setting of the integral gain will depend on the time it takes the tank to go from the minimum acceptable level to the desired level in the following conditions:

- For direct action, the time must be measured with the maximum input flow and minimum output flow.
- For reverse action, the time must be measured with the minimum input flow and maximum output flow.

The formula to calculate the initial value of P0521 considering the system response time is presented below:

P0521 = 0.5 / t,

Where: t = time (in seconds).

P0525 – PID Setpoint by HMI

Adjustable Range:	0.0 to 100.0 %	**Factory Setting:**	0.0 %
Properties:			
Access Groups via HMI:			

Description:

This parameter allows setting the setpoint of the PID controller by the HMI keys, since P0221 = 0 or P0222 = 0 and if it is operating in the Automatic mode. The value of 100.0 % is equivalent to the full scale of the indication in P0040 and P0041 given by P0528.

In case the operation is in the Manual mode, the reference via HMI is set in parameter P0121.

The value of P0525 is kept in the last value set (backup) even when disabling or powering down the inverter when P0536 = 1 (Active).

P0526 – PID Setpoint Filter

Adjustable Range:	0 to 9999 ms	**Factory Setting:**	50 ms
Properties:			
Access Groups via HMI:			

Description:

This parameter sets the setpoint filter time constant of the PID controller. It is intended to attenuate sudden changes in the setpoint value of the PID.

P0527 – PID Action Type

Adjustable Range:	0 = Direct 1 = Reverse	**Factory Setting:**	0
Properties:			
Access Groups via HMI:			

Description:

The PID action type must be selected as "direct" when it is necessary that the motor speed be increased to make the process variable increment. Otherwise, select "Reverse".

Table 15.3: *Selection of the PID action*

Motor Speed (P0002)	Process Variable (P0040)	P0527
Increases	Increases	0 (Direct)
	Decreases	1 (Reverse)

This characteristic varies according to the process type, but direct feedback is more commonly used.

In temperature or level control processes, the setting of the kind of action will depend on the configuration. For example: in the level control, if the inverter acts on the motor that removes liquid from the tank, the action will be reverse, because when the level rises, the inverter will have to increase the motor speed to make it lower. In case the inverter acts on the motor that fills the tank, the action will be direct.

P0528 – Process Variable Scale Factor

Adjustable Range:	10 to 30000	**Factory Setting:**	1000
Properties:			
Access Groups via HMI:	HMI		

Description:

It defines how the PID feedback or process variable will be presented in P0040, as well as the PID Setpoint in P0041. Therefore, the PID feedback or process variable full scale which corresponds to 100.0 % in P0525, in the analog input (AI1 or AI3) or in the frequency input (FI) used as feedback of the PID controller is indicated in P0040 and P0041 in the scale defined by P0528 and P0529.

Example: the pressure transducer operates at 4-20 mA for a band of 0 to 25 bars; setting of parameter P0528 at 250 and P0529 at 1.

P0529 – Process Variable Indication Form

Adjustable Range:	0 = wxyz 1 = wxy.z 2 = wx.yz 3 = w.xyz	**Factory Setting:**	1
Properties:			
Access Groups via HMI:	HMI		

Description:

This parameter allows setting the form of indication of the PID process variable (P0040) and PID setpoint (P0041).

P0533 – X Process Variable Value

Adjustable Range:	0.0 to 100.0 %	**Factory Setting:**	90.0 %
Properties:			
Access Groups via HMI:	I/O		

Description:

These parameters are used in the digital output functions (refer to Section 14.6 DIGITAL OUTPUTS on page 14-23) with the purpose of signaling/alarm. In order to do so, you must program the Digital Output function (P0275...P0279) at 22 = Process Variable > VPx, or at 23 = Process Variable < VPx.

P0535 – Wake Up Band

Adjustable Range:	0.0 to 100.0 %	**Factory Setting:**	0.0 %
Properties:			
Access Groups via HMI:	I/O		

Description:

It is the process variable error in relation to the PID setpoint to enter and exit the Sleep mode. The value of P0535 is expressed in % of the full scale (P0528) like the scale of P0525, that is:

$$\text{Error} = \frac{\text{P0041 - P0040}}{\text{P0528}} \cdot 100\ \%$$

The parameter P0535 ensures that, besides the conditions defined by P0217 and P0218, the PID controller error is in an acceptable range around the Setpoint so as to allow the inverter to go into the Sleep mode (disabling the motor), as shown by Figure 15.4 on page 15-11.

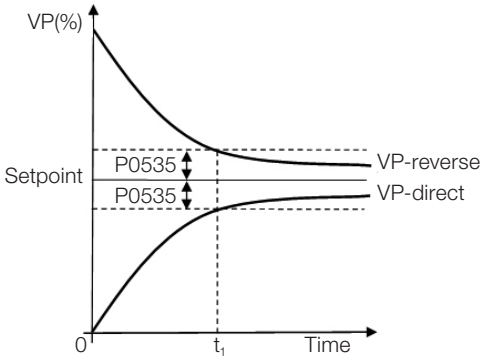

Figure 15.4: *OK setpoint band defined by P0535*

According to Figure 15.4 on page 15-11, the condition imposed by P0535 depends on the type of action of the PID: direct or reverse. Therefore, if the PID is direct (P0527 = 0) the error must be smaller than P0535 for the inverter to go into the Sleep mode (Setpoint ok). On the other hand, if the PID is reverse (P0527 = 1), the error must be bigger than -P0535 for the inverter to go into the Sleep mode.

Parameter P0535 acts together with parameters P0217 and P0218. According to Figure 15.4 on page 15-11, from "t_1" the Sleep mode can occur in case the other conditions are met. For further information on the Sleep mode, refer to Section 13.2 SLEEP MODE on page 13-3.

P0536 – P0525 Automatic Setting

Adjustable Range:	0 = Inactive 1 = Active	**Factory Setting:**	0
Properties:	cfg		
Access Groups via HMI:			

Description:

If the PID controller setpoint is via HMI (P0221/P0222 = 0) and P0536 = 1, when changing from Manual to Automatic, the value of the process variable (P0040) will be converted in % of P0528 and loaded in P0525. Thus, you prevent oscillations of the PID in the change from Manual to Automatic.

Table 15.4: *P0536 configuration*

P0536	Function
0	Inactive (does not copy the P0040 value in P0525)
1	Active (copies the P0040 value in P0525)

15.6 ACADEMIC PID

The PID controller implemented in the CFW500 is academic type. Below are presented the equations that characterize the academic PID, which is the algorithm base of this function.

The transfer function in the frequency domain of the academic PID controller is:

y(s) = Kp x e(s) x [1 + 1 + sTd] sTi

Replacing the integrator by a sum and the derivative by the incremental quotient, you obtain the approximation for the discrete (recursive) transfer equation presented below:

y(k) = y(k-1) + Kp[(1 + Ki.Ta + Kd/Ta).e(k) – (Kd/Ta).e(k-1)]

Where:

y(k): present PID output, it may vary from 0.0 to 100.0 %.
y(k-1): PID previous output.
Kp (Proportional Gain): Kp = P0520.
Ki (Integral Gain): Ki = P0521 x 100 = [1/Ti x 100].
Kd (Differential Gain): Kd = P0522 x 100 = [Td x 100].
Ta = 0.05 sec (sampling period of the PID controller).
e(k): present error [SP*(k) – X(k)].
e(k-1): previous error [SP*(k-1) – X(k-1)].
SP*: setpoint (reference), it may vary from 0.0 to 100.0 %.
X: process variable (or feedback) read through one of the analog inputs, according to the selection of P0203, and it may vary from 0.0 to 100.0 %.

16 RHEOSTATIC BRAKING

The braking torque that may be obtained by the application of frequency inverters, without rheostatic braking resistors, varies from 10 % to 35 % of the motor rated torque.

In order to obtain higher braking torques, resistors for rheostatic braking are used. In this case, the regenerated energy is dissipated in the resistor mounted outside the inverter.

This kind of braking is used in cases where short deceleration times are desired or when high-inertia loads are driven.

The Rheostatic Braking function can only be used if a braking resistor is connected to the inverter, and if the parameters related to it are properly set.

P0153 – Rheostatic Braking Level

Adjustable Range:	339 to 1200 V	**Factory Setting:**	375 V (P0296 = 0) 748 V (P0296 = 1) 748 V (P0296 = 2) 748 V (P0296 = 3) 748 V (P0296 = 4) 748 V (P0296 = 5) 950 V (P0296 = 6) 950 V (P0296 = 7)
Properties:			
Access Groups via HMI:			

Description:

Parameter P0153 defines the voltage level to activate the braking IGBT, and it must be compatible with the power supply.

If P0153 is set close to the overvoltage actuation level (F0022), it may occur before the braking resistor can dissipate the motor regenerated energy. On the other hand, if the level is too lower than the overvoltage, the function limits the actuation at a maximum of 15 % of the overvoltage level.

Thus, it is ensured that the braking resistor will not actuate in the DC Link rated operating region; refer to Table 16.1 on page 16-1. Therefore, although P0153 has a wide setting band (339 to 1200 V), only the values defined by the actuation band in Table 16.1 on page 16-1 are effective, that is, values below the actuation band are internally limited in the execution of the function and values above naturally deactivate the function.

Table 16.1: *Rheostatic Braking actuation value*

Input Voltage	Rated DC Link	P0153 Actuation Band	P0153 Factory Default
200 to 240 Vac	339 Vdc	349 to 410 Vdc	375 Vdc
380 to 480 Vac	678 Vdc	688 to 810 Vdc	750 Vdc
500 to 600 Vac	846 Vdc	850 to 1000 Vdc	950 Vdc

Figure 16.1 on page 16-2 shows an example of typical Rheostatic Braking actuation, where it can be observed the hypothetical wave shapes of the voltage on the braking resistor and the voltage on the DC Link. Thus, when the braking IGBT connects the link to the external resistor, the DC Link voltage drops below the value set by P0153, keeping the level below fault F0022.

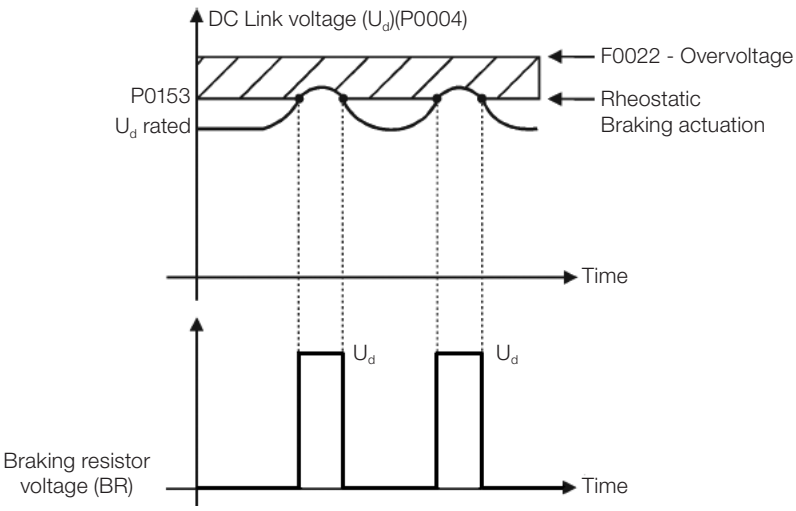

Figure 16.1: *Rheostatic Braking actuation curve*

Steps to enable the Rheostatic Braking:

- With the inverter powered down, connect the braking resistor (refer to the CFW500 user's manual, item 3.2 Electrical Installation).
- Setting P0151 for the maximum value: 410 V (P0296 = 0), 810 V (P0296 = 1) or 1200 V (P0296 = 3), according to the situation, in order to prevent the actuation of the DC Link voltage regulation before the Rheostatic Braking.

DANGER!
Be sure the inverter is OFF and disconnected before handling the electric connections and read carefully the installation instructions of the CFW500 user's manual.

17 FAULTS AND ALARMS

The problem detection structure in the inverter is based on the fault and alarm indication.

In case of fault, the locking the IGBTs and motor stop by inertia will occur.

The alarm works as a warning for the user of critical operating conditions and that may cause a fault if the situation is not corrected.

Refer to chapter 6 Troubleshooting and Maintenance of the CFW500 user's manual and Chapter QUICK REFERENCE OF PARAMETERS, ALARMS, FAULTS AND CONFIGURATIONS on page 0-1 contained in this manual to obtain more information regarding the faults and alarms.

17.1 MOTOR OVERLOAD PROTECTION (F0072 AND A0046)

The motor overload protection is based on the use of curves that simulate the heating and cooling of the motor in cases of overload. The motor overload protection fault and alarm codes are F0072 and A0046 respectively.

The motor overload is given considering the reference value In x FS (motor rated current multiplied by the duty factor), which is the maximum value at which the overload protection must not actuate, because the motor can work continuously at that current value without damages.

However, for that protection to actuate properly, the winding-temperature supervision (which corresponds to the time of heating and cooling of the motor) is estimated.

This winding-temperature supervision is approximated by a function called Ixt, which integrates the output current value from a level previously defined by P0156, P0157 and P0158. When the accumulated value reaches the limit, an alarm and/or fault are indicated.

In order to ensure greater protection in case of restart, this function keeps the value integrated by the function Ixt in the inverter non-volatile memory. Thus, after the energizing, the function will use the Ixt value saved in this memory to perform a new evaluation of overload.

P0156 – Overload Current at Rated Speed

P0157 – Overload Current 50 % of Rated Speed

P0158 – Overload Current 5 % of Rated Speed

Adjustable Range:	0.0 to 200.0 A	**Factory Setting:**	P0156 = 1.1 x I_{nom} P0157 = 1.0 x I_{nom} P0158 = 0.8 x I_{nom}
Properties:			
Access Groups via HMI:			

Description:

These parameters define the motor overload current (Ixt - F0072). The motor overload current is the current value (P0156, P0157 and P0158) based on which the inverter will understand that the motor is operating in overload.

For self-ventilated motors, the overload depends on the speed that is being applied to the motor. Therefore, for speeds below 5 % of the rated speed the overload current is P0158, while for speeds between 5 % and 50 % the overload current is P0157, and above 50 %, it is P0156.

The greater the difference between the motor current and the overload current (P0156, P0157 or P0158), the faster the actuation of fault F0072.

It is recommended that parameter P0156 (motor overload current at rated speed) be set at a value 10 % above the used motor rated current (P0401).

In order to deactivate the motor overload function just set parameters P0156 to P0158 to values equal to or above two times the inverter rated current P0295.

Figure 17.1 on page 17-3 shows the overload actuation time considering the normalized output current in relation to the overload current (P0156, P0157 or P0158), that is, for a constant output current with 150 % of overload, fault F0072 occurs in 60 seconds. On the other hand, for output current values below P0156, P0157 or P0158, according to the output frequency, fault F0072 does not occur. Whereas for values above 150 % of P0156, P0157 or P0158 the fault actuation time is below 60 s.

P0349 – Level for Alarm Ixt

Adjustable Range:	70 to 100 %	**Factory Setting:**	85 %
Properties:	cfg		
Access Groups via HMI:			

Description:

This parameter defines the level for alarm actuation of the motor overload protection (A0046 when P0037 > P0349). The parameter is expressed in percentage of the overload integrator limit value, where fault F0072 occurs. Therefore, by setting P0349 at 100 %, the overload alarm is inactive.

P0037 – Motor Overload Ixt

Adjustable Range:	0 to 100 %	**Factory Setting:**	
Properties:	ro		
Access Groups via HMI:	READ		

Description:

This parameter indicates the present motor overload percentage or overload integrator level. When this parameter reaches the P0349 value the inverter will indicate the motor overload alarm (A0046). As soon as the value of the parameter is at 100 %, a motor overload fault (F0072) is raised.

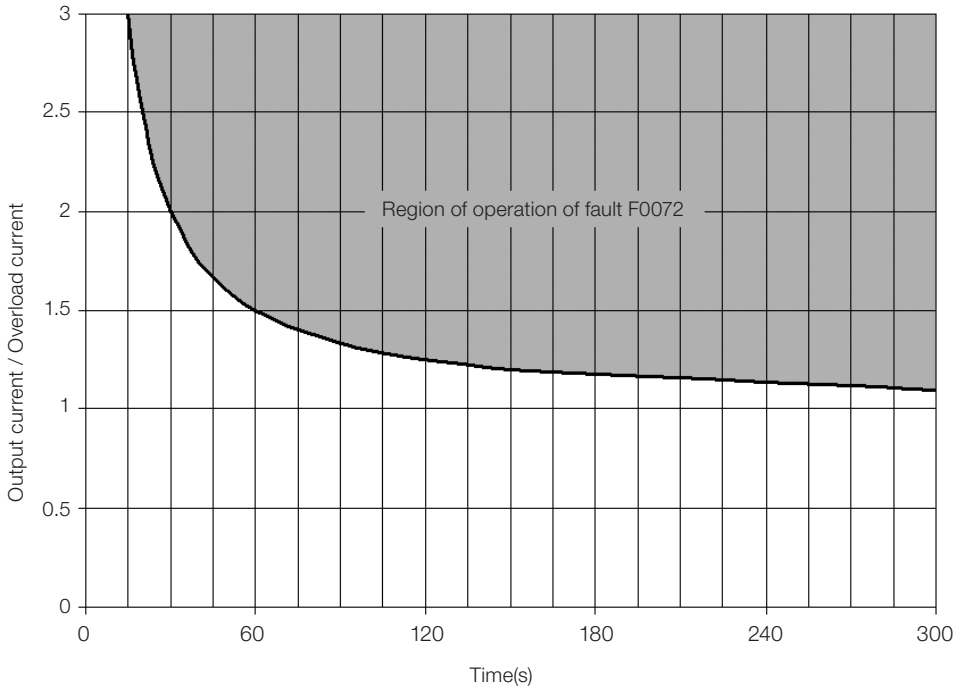

Figure 17.1: *Actuation of the motor overload*

P0038 – Encoder Speed

Adjustable Range:	0 to 65535 rpm	**Factory Setting:**	
Properties:	ro		
Access Groups via HMI:	READ		

Description:

It indicates the encoder actual speed, in revolutions per minute (rpm), through a 0.5 second filter.

P0039 – Encoder Pulse Counter

Adjustable Range:	0 to 40000	**Factory Setting:**	
Properties:	ro		
Access Groups via HMI:	READ		

Description:

This parameter shows the counting of the pulses of the encoder. The counting can be increased from 0 to 40000 (Hourly turn) or decreased from 40000 to 0 (rotate Counterclockwise).

17.2 IGBTS OVERLOAD PROTECTION (F0048 AND A0047)

The CFW500 IGBTs overload protection uses the same motor protection format. However, the project point was modified for the fault F0048 to occur in three seconds for 200 % of overload in relation to the inverter rated current (P0295), as shown in Figure 17.2 on page 17-4. On the other hand, the IGBTs overload (F0048) has no actuation for levels below 150 % of the inverter rated current (P0295).

Before the actuation of fault F0048, the inverter can indicate alarm A0047 when the IGBTs overload level is above the value programmed in P0349.

The IGBTs overload protection can be disabled through parameter P0343.

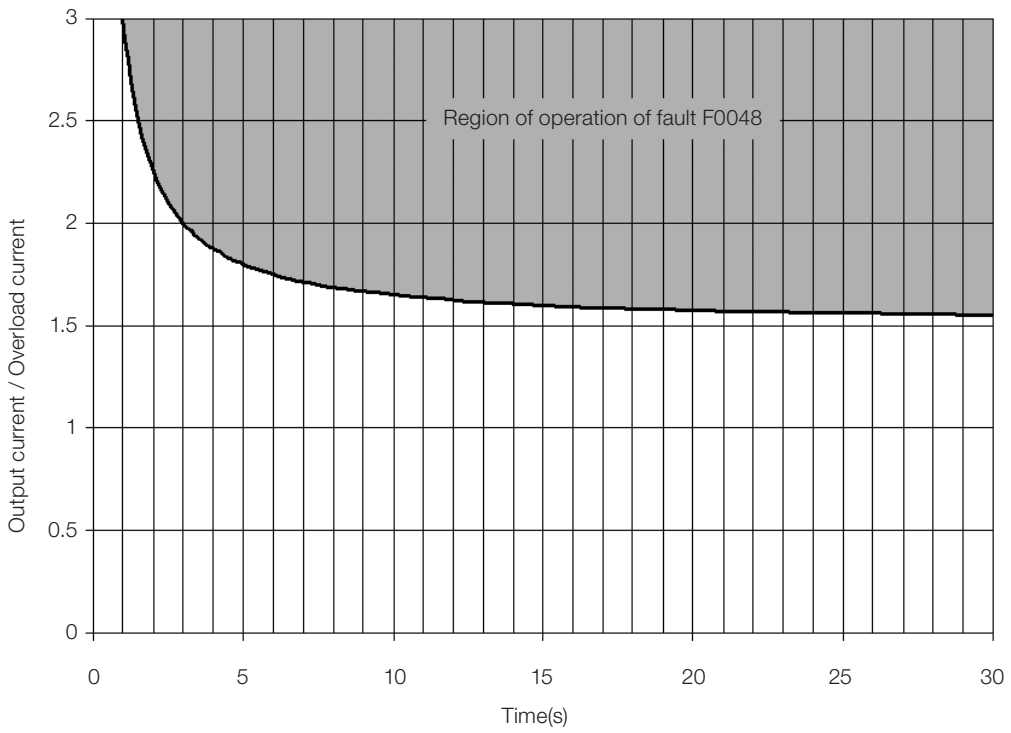

Figure 17.2: *Actuation of the overload of the IGBTs*

P0343 – Mask for Faults and Alarms

Adjustable Range:	Bit 0 = F0074 Bit 1 = F0048 Bit 2 = F0078 Bit 3 = F0079 Bit 4 = F0076 Bit 5 = F0179 Bit 6 = F0067 Bit 7 to 15 = Reserved	**Factory Setting:**	004Fh
Properties:	cfg		
Access Groups via HMI:			

Description:

Parameter P0343 allows deactivating some faults and alarms specific of the inverter. By means of a bit mask, a binary number is formed, where the "Bit" equivalent to "0" disables the respective fault or alarm. Note that the numeric representation of P0343 is hexadecimal.

ATTENTION!
Disable the ground fault or overload protections may damage the inverter. Only do that under WEG technical directions.

17

17.3 MOTOR OVERTEMPERATURE PROTECTION (F0078)

This function protects the motor against overtemperature through indication of fault F0078.

The motor needs a temperature sensor of the triple PTC type. The reading of the sensor can be done in two different ways: through the analog input or through the digital input.

For the reading of the PTC via analog input, it is necessary to configure it for current input and select option "4 = PTC" in P0231, P0236 or P0241. Connect the PTC between source +10 Vdc and the analog input, as well as close the AIx configuration DIP-Switch in "mA".

The analog input reads the PTC resistance and compares it to the limits values for the fault. When those values are exceeded, fault F0078 is indicated, as shown in Table 17.1 on page 17-5.

ATTENTION!
The PTC must have reinforced electrical insulation up to 1000 V.

Table 17.1: *Actuation level of fault F0078 PTC via analog input*

PTC Resistance	AIx	Overtemperature
$R_{PTC} < 50\ \Omega$	$V_{IN} > 9.1$ V	F0078
$50\ \Omega < R_{PTC} < 3.9$ kΩ	$9.1\ V > V_{IN} > 1.3$ V	Standard
$R_{PTC} > 3.9$ kΩ	$V_{IN} < 1.3$ V	F0078

NOTE!
For this function to work properly, it is important to keep the gain(s) and offset(s) of the analog inputs at the standard values.

For the PTC via digital input it is necessary to set the option 29 (PTC) in the DIx programming in P0263 to P0270, and connect the PTC to the referred digital input and to the GND. The resistance levels of the triple PTC are the same as those of the analog input in Table 17.1 on page 17-5, but the short-circuit of PTC ($R_{PTC} < 50\ \Omega$) cannot be detected, and thus it is seen as normal operation. Only the case $R_{PTC} > 3.9$ kΩ activates fault F0078.

NOTE!
The DI2 is the only one that cannot be used as PTC input, because it has input circuit dedicated to frequency input (FI).

Figure 17.3 on page 17-5 shows the PTC connection to the inverter terminals for both situations: via analog input **(a)** and via digital input **(b)**.

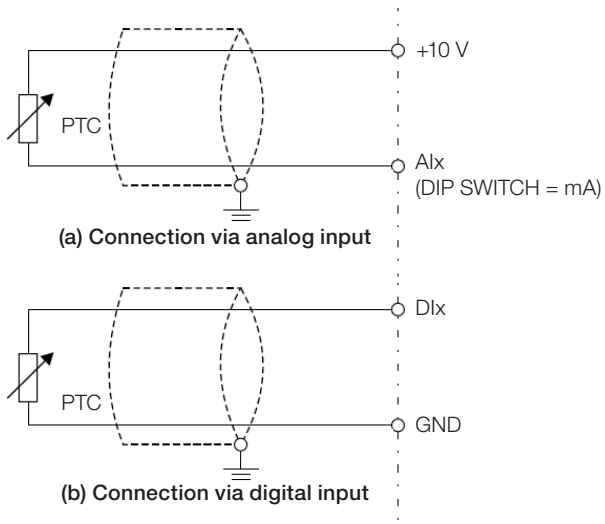

Figure 17.3: *(a) and (b) PTC connection to the CFW500*

17.4 IGBTS OVERTEMPERATURE PROTECTION (F0051 AND A0050)

The power module temperature is monitored and indicated in parameter P0030 in degrees Celsius. This value is constantly compared to the overtemperature fault and alarm trigger value of the power module F0051 and A0050, according to Table 17.2 on page 17-6 where the level for actuation of the alarm A0050 is fixed at 5 °C (41 °F) below the level of F0051.

Table 17.2: Overtemperature actuation levels of the power module F0051

Frame	Model	Level F0051
Frame A	1.6 A / 200 V	80 °C (176 °F)
	2.6 A / 200 V	80 °C (176 °F)
	4.3 A / 200 V	80 °C (176 °F)
	7.0 A / 200 V	93 °C (199.4 °F)
	9.6 A / 200 V	100 °C (212 °F)
	1.0 A / 400 V	97 °C (206.6 °F)
	1.6 A / 400 V	97 °C (206.6 °F)
	2.6 A / 400 V	97 °C (206.6 °F)
	4.3 A / 400 V	97 °C (206.6 °F)
	6.1 A / 400 V	123 °C (253.4 °F)
Frame B	7.3 A / 200 V	85 °C (185 °F)
	10 A / 200 V	95 °C (203 °F)
	16 A / 200 V	110 °C (230 °F)
	2.7 A / 400 V	105 °C (221 °F)
	4.3 A / 400 V	105 °C (221 °F)
	6.5 A / 400 V	105 °C (221 °F)
	10 A / 400 V	110 °C (230 °F)
Frame C	24 A / 200 V	120 °C (248 °F)
	14 A / 400 V	110 °C (230 °F)
	16 A / 400 V	110 °C (230 °F)

Besides the alarm indication A0050, the overtemperature protection automatically reduces the switching frequency (P0297) for the value of 2500 Hz. This overtemperature protection characteristic can be deactivated in the control configuration parameter P0397.

ATTENTION!
An improper change of P0397 may damage the inverter. Only do that under WEG technical directions.

17.5 OVERCURRENT PROTECTION (F0070 AND F0074)

The ground fault and output overcurrent protections act very fast by means of the hardware to instantly cut the output PWM pulses when the output current is high.

Fault F0070 corresponds to an overcurrent between output phases, while fault F0074 indicates an overcurrent from the phase to the ground (PE).

The protection current level depends on the used power module so as the protection is effective, still this value is well above the inverter rated operating current (P0295).

17.6 LINK VOLTAGE SUPERVISION (F0021 AND F0022)

The DC Link voltage is constantly compared to the maximum and minimum values according to the inverter power supply, as shown in Table 17.3 on page 17-6.

Table 17.3: Supervision actuation levels of the DC Link voltage

Supply	Level F0021	Level F0022
200 to 240 Vac	200 Vdc	410 Vdc
380 to 480 Vac	360 Vdc	810 Vdc
500 to 600 Vac	500 Vdc	1000 Vdc

17.7 PLUG-IN MODULE COMMUNICATION FAULT (F0031)

It occurs when the inverter detects a plug-in module connected, but cannot communicate with it.

17.8 CONTROL MODE SELF-TUNING FAULT (F0033)

At the end of the self-tuning process of the VVW mode (P0408 = 1), if the estimate motor stator resistance (P0409) is too high for the inverter in use, the inverter will indicate fault F0033. Besides, the manual modification of P0409 may also cause fault F0033.

17.9 REMOTE HMI COMMUNICATION FAULT ALARM (A0750)

After the connection of the remote HMI to the CFW500 terminals with parameter P0312 set to remote HMI interface, a supervision of the communication with the HMI is activated so that alarm A0750 is activated whenever this communication link is broken.

17.10 REMOTE HMI COMMUNICATION ERROR FAULT (F0751)

The condition for fault F0751 is the same as that of alarm A0750, but it is necessary that the HMI be the source for some command or reference (HMI Keys option) in parameters P0220 to P0228.

17.11 AUTO-DIAGNOSIS FAULT (F0084)

Before starting loading the factory default (P0204 = 5 or 6), the inverter identifies the power hardware in order to obtain information on the power module voltage, current and trigger, as well as it verifies the inverter control basic circuits.

Fault F0084 indicates something wrong happened during the identification of the hardware: nonexistent inverter model, some loose connection cable or damaged internal circuit.

NOTE!
When this fault occurs, contact WEG.

17.12 FAULT IN THE CPU (F0080)

The execution of the inverter firmware is monitored at several levels of the firmware internal structure. When some internal fault is detected in the execution, the inverter will indicate F0080.

NOTE!
When this fault occurs, contact WEG.

17.13 INCOMPATIBLE MAIN SOFTWARE VERSION (F0151)

When the inverter is energized, the main software version stored in the non-volatile area (EEPROM) is compared to the version stored in the secondary microcontroller Flash memory (plug-in module). This comparison is done to check the integrity and compatibility of the stored data. Those data are stored to allow copying the parameter configuration (standard user, 1 and 2) between inverters using the CFW500-MMF and with the inverter de-energized. If the versions are not compatible, fault F0151 will occur.

For further information on possible causes for the occurrence of fault F0151, refer to the CFW500-MMF accessory guide.

17.14 PULSE FEEDBACK FAULT (F0182)

When the dead time compensation is active in P0397 (refer to Chapter 8 AVAILABLE MOTOR CONTROL TYPES on page 8-1) and the pulse feedback circuit has some defect, fault F0182 will occur.

NOTE!
When this fault occurs, contact WEG.

17.15 FAULT HISTORY

The inverter is able to store a set of data on the last three faults occurred, such as: fault number, current (P0003), DC Link voltage (P0004), output frequency (P0005), power module temperature (P0030) and logical status (P0680).

P0048 – Present Alarm

P0049 – Present Fault

Adjustable Range:	0 to 999	**Factory Setting:**	
Properties:	ro		
Access Groups via HMI:	READ		

Description:

They indicate the alarm number (P0048) or the fault (P0049) that may be present in the inverter.

P0050 – Last Fault

P0060 – Second Fault

P0070 – Third Fault

Adjustable Range:	0 to 999	**Factory Setting:**	
Properties:	ro		
Access Groups via HMI:	READ		

Description:

They indicate the number of the occurred fault.

P0051 – Output Current Last Fault

P0061 – Output Current Second Fault

P0071 – Output Current Third Fault

Adjustable Range:	0.0 to 200.0 A	**Factory Setting:**	
Properties:	ro		
Access Groups via HMI:	READ		

Description:

They indicate the output current at the moment of the occurred fault.

P0052 – Last Fault DC Link

P0062 – Second Fault DC Link

P0072 – Third Fault DC Link

Adjustable Range:	0 to 2000 V	**Factory Setting:**	
Properties:	ro		
Access Groups via HMI:	READ		

Description:

They indicate the DC Link voltage at the moment of the occurred fault.

P0053 – Output Frequency Last Fault

P0063 – Output Frequency Second Fault

P0073 – Output Frequency Third Fault

Adjustable Range:	0.0 to 500.0 Hz	**Factory Setting:**	
Properties:	ro		
Access Groups via HMI:	READ		

Description:

They indicate the output frequency at the moment of the occurred fault.

P0054 – Temperature in the IGBTs Last Fault

P0064 – Temperature in the IGBTs Second Fault

P0074 – Temperature in the IGBTs Third Fault

Adjustable Range:	-20 to 150 °C (-4 to 302 °F)	**Factory Setting:**	
Properties:	ro		
Access Groups via HMI:	READ		

Description:

These parameters indicate the IGBTs temperature at the moment of the occurred fault.

P0055 – Last Fault Logical Status

P0065 – Second Fault Logical Status

P0075 – Third Fault Logical Status

Adjustable Range:	0000h to FFFFh	**Factory Setting:**	
Properties:	ro		
Access Groups via HMI:	READ		

Description:

It records the inverter logical status of P0680 at the moment of the occurred fault. Refer to Section 7.3 CONTROL WORD AND INVERTER STATUS on page 7-13.

17.16 FAULT AUTO-RESET

This function allows the inverter to execute the automatic reset of a fault by means of the setting of P0340.

NOTE!
The auto-reset is locked if the same fault occurs three times in a row within 30 seconds after the reset.

P0340 – Auto-Reset Time

Adjustable Range:	0 to 255 s	**Factory Setting:**	0 s
Properties:			
Access Groups via HMI:			

Description:

It defines the interval after a fault to activate the inverter auto-reset. If the value of P0340 is zero the fault auto-reset function is disabled.

18 READING PARAMETERS

In order to simplify the view of the main inverter reading variables, you may directly access the READ – "Reading Parameters" menu of the CFW500 HMI.

It is important to point out that all the parameters of this group can only be viewed on the HMI display, and cannot be changed by the user.

P0001 – Speed Reference

Adjustable Range:	0 to 65535	**Factory Setting:**	
Properties:	ro		
Access Groups via HMI:	READ		

Description:

This parameter presents, regardless the origin source, the speed reference value in the unit and scale defined for the reference by P0208, P0209 and P0212. The full scale and reference unit in the factory default are 66.0 Hz for P0204 = 5 and 55.0 Hz for P0204 = 6.

P0002 – Output Speed (Motor)

Adjustable Range:	0 to 65535	**Factory Setting:**	
Properties:	ro		
Access Groups via HMI:	READ		

Description:

Parameter P0002 indicates the speed imposed to the inverter output at the same scale defined for P0001. In this parameter, the compensations made to the output frequency are not shown. To read the compensated output, use P0005.

P0003 – Motor Current

Adjustable Range:	0.0 to 200.0 A	**Factory Setting:**	
Properties:	ro		
Access Groups via HMI:	READ		

Description:

It indicates the inverter output current in amperes RMS (Arms).

P0004 – DC Link Voltage (Ud)

Adjustable Range:	0 to 2000 V	**Factory Setting:**	
Properties:	ro		
Access Groups via HMI:	READ		

Description:

It indicates the DC Link direct current voltage in Volts (V).

P0005 – Output Frequency (Motor)

Adjustable Range:	0.0 to 500.0 Hz	**Factory Setting:**	
Properties:	ro		
Access Groups via HMI:	READ		

Description:

Real frequency instantly applied to the motor in Hertz (Hz).

P0006 – Inverter Status

Adjustable Range:	According to Table 18.1 on page 18-2	**Factory Setting:**	
Properties:	ro		
Access Groups via HMI:	READ		

Description:

It indicates one of the eight possible inverter status. In Table 18.1 on page 18-2, a description of each status is presented, as well as the indication on the HMI.

Table 18.1: *Inverter status - P0006*

P0006	Status	HMI	Description
0	Ready		Indicates the inverter is ready to be enabled.
1	Run		Indicates the inverter is enabled.
2	Undervoltage	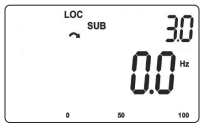	Indicates the voltage in the inverter is too low for operation (undervoltage), and will not accept the enabling command.
3	Fault		Indicates the inverter is in the fault status.
4	Self-Tuning	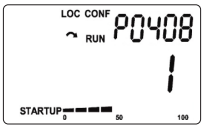	Indicates the inverter is executing the Self-Tuning routine.
5	Configuration		Indicates the inverter has incompatible parameter programming. Refer to Section 5.6 SITUATIONS FOR CONFIG STATUS on page 5-7.
6	DC-Braking		Indicates the inverter is applying DC Braking to stop the motor.
7	Sleep Mode		Indicates the inverter is in the Sleep mode according to P0217, P0213 and P0535.

P0007 – Output Voltage

Adjustable Range:	0 to 2000 V	**Factory Setting:**	
Properties:	ro		
Access Groups via HMI:	READ		

Description:

It indicates the line voltage in inverter output, in Volts (V).

P0009 – Motor Torque

Adjustable Range:	-1000.0 to 1000.0 %	**Factory Setting:**	
Properties:	ro		
Access Groups via HMI:	READ		

Description:

It indicates the torque developed by the motor in relation to the rated torque.

For vector control (P0202 = 3 or P0202 = 4), the approximate torque calculation can be given by:

The motor torque (P0009) in percentage in the operating condition of permanent duty is given by:

$$I_{torque} = \sqrt{P0003^2 - \left(P0410 \times \frac{P0178}{100}\right)^2}$$ (torque current in the operating condition)

$$I_{nom_torque} = \sqrt{P0401^2 - \left(P0410 \times \frac{P0178}{100}\right)^2}$$ (rated torque current)

$$P0009 = T_{motor}(\%) = 100 \times \frac{I_{torque}}{I_{nom_torque}} \times k$$

Where the factor k is defined by:

- region of constant flux (constant torque and below or equal to the synchronous speed):

k = 1

- region of field weakening (region of constant power; higher than the synchronous speed):

$$k = \frac{N_{sync}}{P0002} \times \frac{P0190}{P0400}$$

Whose N_{sync} is the motor synchronous speed in RPM.

P0010 – Output Power

Adjustable Range:	0.0 to 6553.5 kW	**Factory Setting:**	
Properties:	ro		
Access Groups via HMI:	READ		

Description:

It indicates the electric power in the inverter output. This power is determined through the formula:

P0010 = 1.732 x P0003 x P0007 x P0011.

Where: 1.732 = $\sqrt{3}$.
P0003 is the output current measured.
P0007 is the reference output voltage (or estimated).

P0011 is the value of the cosine [(vector angle of the reference output voltage) – (vector angle of the output current measured)].

P0011 – Power Factor

Adjustable Range:	-1.00 to 1.00	**Factory Setting:**	
Properties:	ro		
Access Groups via HMI:	READ		

Description:

It indicates the power factor, that is, the relationship between the real power and the total power absorbed by the motor.

P0012 – Digital Input Status

Refer to Section 14.5 DIGITAL INPUTS on page 14-14.

P0013 – Digital Output Status

Refer to Section 14.6 DIGITAL OUTPUTS on page 14-23.

P0014 – Analog Output Values AO1

P0015 – Analog Output Values AO2

Refer to Section 14.2 ANALOG OUTPUTS on page 14-6.

P0016 – Frequency Output Value FO in %

P0017 – Frequency Output Value FO in Hz

Refer to Section 14.4 FREQUENCY OUTPUT on page 14-11.

P0018 – Analog Input Value AI1

P0019 – Analog Input Value AI2

P0020 – Analog Input Value AI3

Refer to Section 14.1 ANALOG INPUTS on page 14-1.

P0021 – Frequency Input Value FI in %

P0022 – Frequency Input Value FI in Hz

Refer to Section 14.3 FREQUENCY INPUT on page 14-9.

P0023 – Version of Main Software

P0024 – Version of Secondary Software

P0027 – Plug-in Module Configuration

P0029 – Power Hardware Configuration

Refer to Section 6.1 INVERTER DATA on page 6-1.

P0030 – Power Module Temperature

Adjustable Range:	-20 to 150 °C (-4 to 302 °F)	**Factory Setting:**	
Properties:	ro		
Access Groups via HMI:	READ		

Description:

Temperature in °C measured inside the power module by the internal NTC. On frames C, D and E, the value of P0030 is used to activate the heatsink fan. The fan is started when the inverter is enabled and with a temperature above 60 °C (140 °F), and turned off at a temperature below 50 °C (122 °F).

P0037 – Motor Overload Ixt

Refer to Section 17.1 MOTOR OVERLOAD PROTECTION (F0072 AND A0046) on page 17-1.

P0040 – PID Process Variable

P0041 – PID Setpoint Value

Refer to Section 15.5 PID PARAMETER on page 15-7.

P0047 – CONFIG Status

Adjustable Range:	0 to 999	**Factory Setting:**	
Properties:	ro		
Access Groups via HMI:	READ		

Description:

This parameter shows the origin situation of CONFIG mode. Refer to Section 5.6 SITUATIONS FOR CONFIG STATUS on page 5-7.

The reading parameters in the range from P0048 to P0075 are detailed in Section 17.15 FAULT HISTORY on page 17-8.

The reading parameters P0295 and P0296 are detailed in the Section 6.1 INVERTER DATA on page 6-1.

The reading parameters P0680 and P0690 are detailed in the Section 7.3 CONTROL WORD AND INVERTER STATUS on page 7-13.

19 COMMUNICATION

In order to exchange information via communication network, the CFW500 features several standardized communication protocols, such as Modbus, CANopen and DeviceNet.

For further details referring to the inverter configuration to operate in those protocols, refer to the CFW500 user's manual for communication with the desired network. Below are listed the parameters related to the communication.

19.1 SERIAL USB, RS-232 AND RS-485 INTERFACE

Depending on the plug-in module installed, the CFW500 features up to two simultaneous serial interfaces; however, only one of them can be source for commands or references; the other is inactive or remote HMI according to the selection of P0312.

One of those interfaces, identified as Serial (1), is the CFW500 standard interface and is present in all the plug-in modules through the terminals of the RS-485 standard port. On the other hand, Serial (2) interface is only present in the CFW500-CUSB, CFW500-CRS232 and CFW500-CRS485 plug-in modules, as per the figures below:

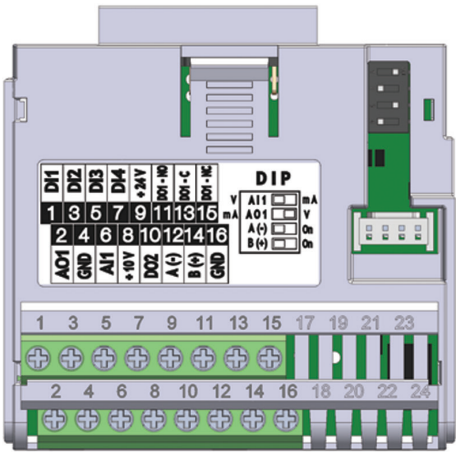

Figure 19.1: Plug-in module CFW500-IOS

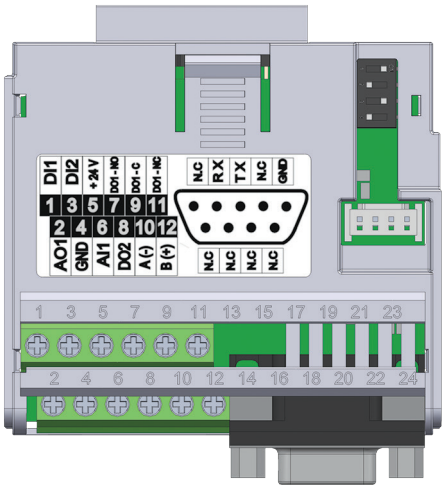

Figure 19.2: Plug-in module CFW500-CRS232

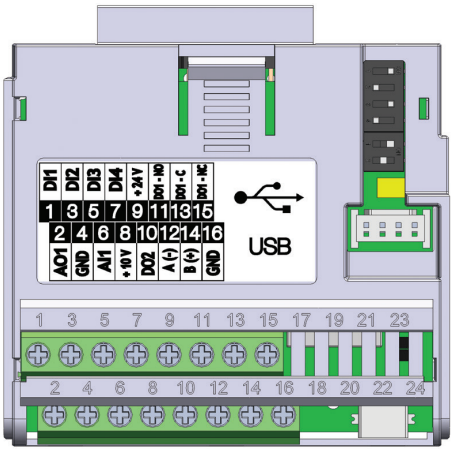

Figure 19.3: Plug-in module CFW500-CUSB

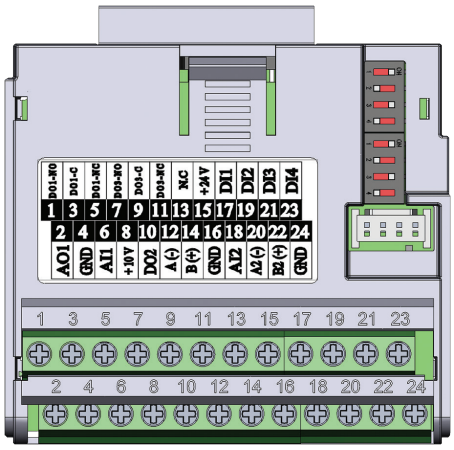

Figure 19.4: Plug-in module CFW500-CRS485

NOTE!
The CFW500-IOS plug-in module has only Serial (1) interface through RS-485 port at terminals 12 (A-) and 14 (B+), see Figure 19.1 on page 19-1.

NOTE!
The CFW500-CRS232 plug-in module has Serial (1) interface through RS-485 port at terminals 10 (A-) and 12 (B+), as well as the Serial (2) interface through RS-232 port at standard connector DB9, see Figure 19.2 on page 19-1.

NOTE!
The CFW500-CUSB plug-in module has Serial (1) interface through RS-485 port at terminals 12 (A-) and 14 (B+), as well as the Serial (2) interface through USB port at standard connector mini USB (mini B), see Figure 19.3 on page 19-1.

NOTE!
The CFW500-CRS485 plug-in module has Serial (1) interface through RS-485 port at terminals 12 (A-) and 14 (B+), as well as the Serial (2) interface through another RS-485 port at terminals 20 (A2+) and 22 (B2+), see Figure 19.4 on page 19-1.

Parameters P0308 to P0316 together with P0682 and P0683 characterize the serial interface which is active for commands and/or reference.

P0308 – Serial Address

Adjustable Range:	1 to 247	**Factory Setting:**	1

P0310 – Serial Baud Rate

Adjustable Range:	0 = 9600 bits/s 1 = 19200 bits/s 2 = 38400 bits/s	**Factory Setting:**	1

P0311 – Serial Interface Bytes Configuration

Adjustable Range:	0 = 8 bits, no, 1 1 = 8 bits, even, 1 2 = 8 bits, odd, 1 3 = 8 bits, no, 2 4 = 8 bits, even, 2 5 = 8 bits, odd, 2	**Factory Setting:**	1
Properties:			
Access Groups via HMI:	NET		

Description:

For a detailed description, refer to the Modbus RTU user's manual, available for download on the website: **www.weg.net**.

P0312 – Serial Interface Protocol (1)(2)

Adjustable Range:	0 = HMIR (1) 1 = Reserved 2 = Modbus RTU (1) 3 and 4 = Reserved 5 = Master RTU (1) 6 = HMIR (1) + Modbus RTU (2) 7 = Modbus RTU (2) 8 to 11 = Reserved 12 = HMI (1)/RTU Master (2) 13 = RTU Master (2)	**Factory Setting:**	2
Properties:	cfg		
Access Groups via HMI:	NET		

Description:

P0312 defines the type of protocol for (1) and (2) Serial interfaces of the frequency inverter; see also Chapter 19 COMMUNICATION on page 19-1. Depending on the plug-in module installed, the CFW500 can feature up to two serial interfaces, but only one of them is available for commands and references. The other interface remains inactive or as interface for CFW500-HMIR, in which the protocol is pre-defined without parameterization and of internal use exclusive of the inverter remote HMI.

P0313 – Action for Communication Error

P0314 – Serial Watchdog

P0316 – Serial Interface Status

P0682 – Control Word via Serial / USB

P0683 – Speed Reference via Serial / USB

Description:

Parameter for configuration and operation of the RS-232 and RS-485 serial interfaces. For a detailed description, refer to the Modbus RTU user's manual, user's manual, available for download on the website: **www.weg.net**.

19.2 CAN – CANOPEN / DEVICENET INTERFACE

P0684 – Control Word via CANopen/DeviceNet

P0685 – Speed Reference via CANopen/DeviceNet

P0700 – CAN Protocol

P0701 – CAN Address

P0702 – CAN Baud Rate

P0703 – Bus Off Reset

P0705 – CAN Controller Status

P0706 – Counter of Received CAN Telegrams

P0707 – Counter of Transmitted CAN Telegrams

P0708 – Counter of Bus Off Errors

P0709 – Counter of Lost CAN Messages

P0710 – DeviceNet I/O Instances

P0711 – DeviceNet Reading #3

P0712 – DeviceNet Reading #4

P0713 – DeviceNet Reading #5

P0714 – DeviceNet Reading #6

P0715 – DeviceNet Writing #3

P0716 – DeviceNet Writing #4

P0717 – DeviceNet Writing #5

P0718 – DeviceNet Writing #6

P0719 – DeviceNet Network Status

P0720 – DeviceNet Master Status

P0721 – CANopen Communication Status

P0722 – CANopen Node Status

Description:

Parameters for configuration and operation of the CAN interface. For detailed description, refer to the CANopen communication manual or DeviceNet communication manual user's manual, available for download on the website: **www.weg.net**.

19.3 PROFIBUS DP INTERFACE

P0740 – Profibus Com. Status

P0741 – Profibus Data Profile

P0742 – Profibus Reading #3

P0743 – Profibus Reading #4

P0744 – Profibus Reading #5

P0745 – Profibus Reading #6

P0746 – Profibus Reading #7

P0747 – Profibus Reading #8

P0750 – Profibus Writing #3

P0751 – Profibus Writing #4

P0752 – Profibus Writing #5

P0753 – Profibus Writing #6

P0754 – Profibus Writing #7

P0755 – Profibus Writing #8

P0918 – Profibus Address

P0922 – Profibus Teleg. Sel.

P0963 – Profibus Baud Rate

P0967 – Control Word 1

P0968 – Status Word 1

Description:

Parameters for configuration and operation of the Profibus DP interface. For detailed description, refer to the Profibus communication manual, user's manual, available for download on the website: **www.weg.net**.

19.4 ETHERNET INTERFACE

P0800 – Eth: Module Identification

P0801 – Eth: Communication Status

P0803 – Eth: Baud Rate

P0806 – Eth: Modbus TCP Timeout

P0810 – Eth: IP Address Config

P0811 – Eth: IP Address 1

P0812 – Eth: IP Address 2

P0813 – Eth: IP Address 3

P0814 – Eth: IP Address 4

P0815 – Eth: CIDR Sub-net

P0816 – Eth: Gateway 1

P0817 – Eth: Gateway 2

P0818 – Eth: Gateway 3

P0819 – Eth: Gateway 4

P0820 – Eth: Read Word #3

P0821 – Eth: Read Word #4

P0822 – Eth: Read Word #5

P0823 – Eth: Read Word #6

P0824 – Eth: Read Word #7

P0825 – Eth: Read Word #8

P0826 – Eth: Read Word #9

P0827 – Eth: Read Word #10

P0828 – Eth: Read Word #11

P0829 – Eth: Read Word #12

P0830 – Eth: Read Word #13

P0831 – Eth: Read Word #14

P0835 – Eth: Write Word #3

P0836 – Eth: Write Word #4

P0837 – Eth: Write Word #5

P0838 – Eth: Write Word #6

P0839 – Eth: Write Word #7

P0840 – Eth: Write Word #8

P0841 – Eth: Write Word #9

P0842 – Eth: Write Word #10

P0843 – Eth: Write Word #11

P0844 – Eth: Write Word #12

P0845 – Eth: Write Word #13

P0846 – Eth: Write Word #14

P0849 – Eth: Configuration Update

Description:

Parameters for configuration and operation of the EtherNet interface. For detailed description, refer to the Ethernet communication manual, user's manual, available for download on the website: **www.weg.net**.

19.5 COMMANDS AND COMMUNICATION STATUS

P0721 – CANopen Communication Status

P0722 – CANopen Node Status

P0681 – Speed at 13 bits

P0695 – Value for Digital Outputs

P0696 – Value 1 for Analog Outputs

P0697 – Value 2 for Analog Outputs

P0698 – Value 3 for Analog Outputs

Description:

Parameters used for monitoring and controlling the CFW500 inverter by using the communication interfaces. For detailed description, refer to the communication manual (User) according to the interface used, available for download on the website: **www.weg.net**.

20 SOFTPLC

The SoftPLC function allows the inverter to assume PLC (Programmable Logical Controller). For further details regarding the programming of those functions in the CFW500, refer to the CFW500 SoftPLC manual. Below are described the parameters related to the SoftPLC.

NOTE!
The SoftPLC application is stored in the memory of the plug-in used at the moment of download. Therefore, if the plug-in is changed, it will be necessary to download the application again.

P1000 – SoftPLC Status

Adjustable Range:	0 = No App. 1 = Installing App. 2 = Incompat. App. 3 = App. Stopped 4 = App. Running	**Factory Setting:**	0
Properties:	ro		
Access Groups via HMI:	SPLC		

Description:

It allows the user to view the status in which the SoftPLC is. If there are no applications installed, the parameters P1001 to P1059 will not be shown on the HMI.

If this parameter presents option 2 = Incompat. App., it indicates the user's program loaded on the SoftPLC is not compatible with the CFW500 firmware version.

In this case, it is necessary that the user recompile the project on the WLP, considering the new CFW500 version and redo the download. If that is not possible, the upload of this application can be done with the WLP, provided that the application password is known or is not enabled.

P1001 – Command for SoftPLC

Adjustable Range:	0 = Stop App 1 = Run App 2 = Stop App 3 = Stop App 4 = Stop App 5 = Delete App	**Factory Setting:**	0...5
Properties:	cfg		
Access Groups via HMI:	SPLC		

Description:

This parameter allows stopping, running or excluding an application installed, but to do so, the motor must be disabled.

NOTE!
In case the application is deleted while using the sensorless or vector with encoder mode, the drive will force a reset.

NOTE!
Parameter P1001 has different value settings according to the version.
For version V2.20, the adjustable range is from 0 to 2 (P1001 = 2 deletes the software application).
For versions V2.21 and up, the range is from 0 to 5.

P1002 – Scan Cycle Time

Adjustable Range:	0 to 65535 ms	**Factory Setting:**	
Properties:	ro		
Access Groups via HMI:	SPLC		

Description:

This parameter sets the application scanning time. The larger the application, the longer is the scanning time.

P1004 - Area for SoftPLC Application Not Running

Adjustable Range:	0 = Inactive 1 = Generate alarm 2 = Generate fault	**Factory Setting:**	0
Properties:	cfg		
Access Groups via HMI:	SPLC		

Description:

It defines which action will be taken by the product in case the SoftPLC not running condition is detected, and it may generate alarm A708 (1), fault F709 (2) or neither of the previous actions, remaining inactive (0).

P1008 - Lag Error

Adjustable Range:	-9999 to 9999	**Factory Setting:**	
Properties:	ro, Enc		
Access Groups via HMI:	SPLC		

Description:

This parameter informs the difference, in encoder pulses, between the reference position and effective position.

P1009 – Position Gain

Adjustable Range:	0 to 9999	**Factory Setting:**	10.0
Properties:	Enc		
Access Groups via HMI:	SPLC		

Description:

Position controller gain of the SoftPLC function of the CFW500 frequency inverter.

> **NOTE!**
> It only actuates when the "Stop" block of the SoftPLC function of the CFW500 frequency inverter is active.

P1010 to P1059 – SoftPLC Parameters

Adjustable Range:	-32768 to 32767	**Factory Setting:**	0
Properties:			
Access Groups via HMI:	SPLC		

Description:

These are parameters whose use is defined by the SoftPLC function.

> **NOTE!**
> Parameters P1010 to P1019 can be viewed in the monitoring mode (refer to Section 5.5 SETTING OF DISPLAY INDICATIONS IN THE MONITORING MODE on page 5-6).

> **NOTE!**
> For further information on the use of the SoftPLC function, refer to the CFW500 SoftPLC manual.